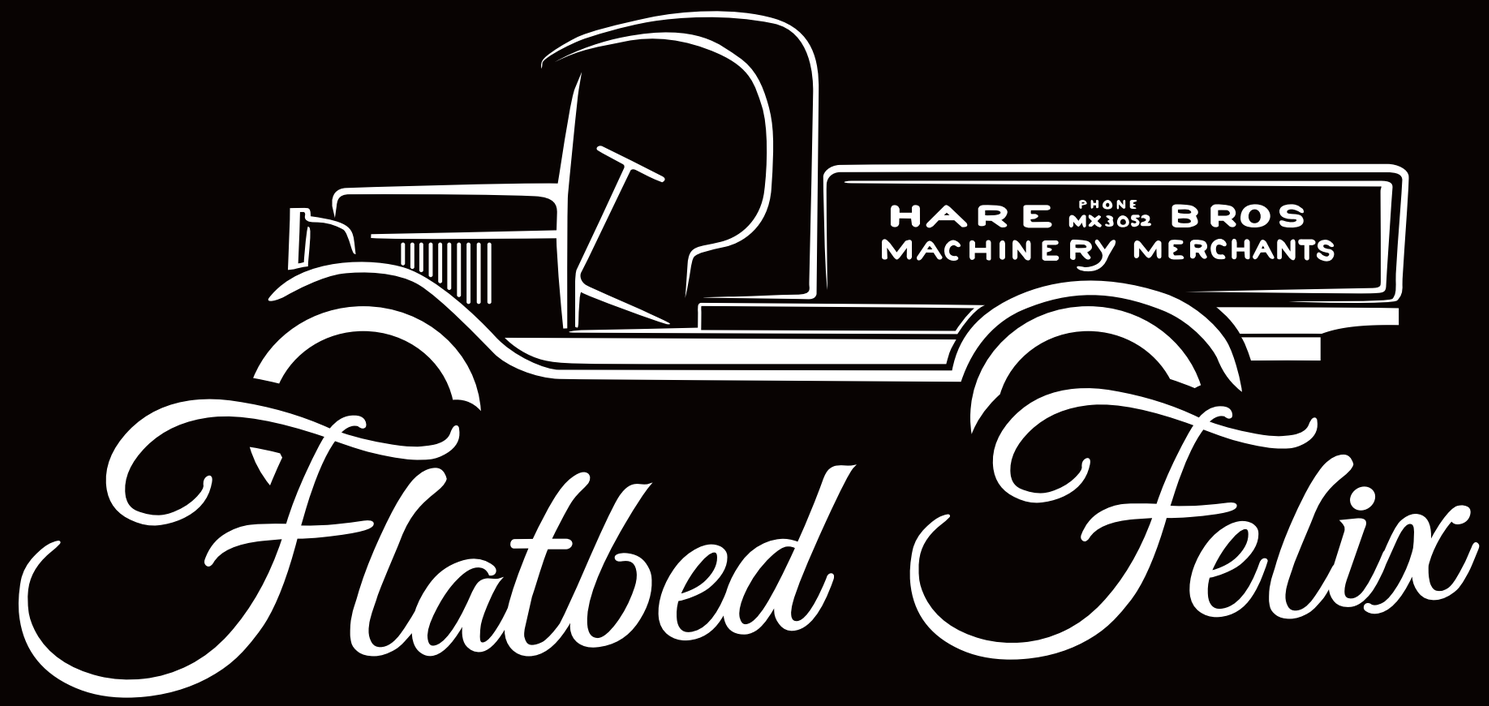


# PEDAL CAR BUILD

HARE&FORBES
MACHINERYHOUSE

www.machineryhouse.com.au

Copyright © 2020 Hare and Forbes Machineryhouse
All rights reserved.

# CHASSIS ASSEMBLY

| PLAN 1 | DRAWING: 1 |
|---|---|
| SCALE: | TOLERANCE ± 2mm |

**MATERIALS LIST:**
Chassis: 6000mm (34.93x19.05x1.6 Rect Commercial ERW Tube Rectangular Box RHS)
Running Board Supports: 1200mm (13x13x1.6mm Mill Finish Primed MS Square Box SHS)
Nut Inserts: 2 x M6 x 1.0mm Metal Nut Inserts
Brackets: 340 x 70 (1.6mm Thick Sheet Mild Steel)
Crank Base Plate: 470mm (40 x 5mm Thick Mild Steel Flat Bar)
Steering Column Support: 260 x 140mm approx. (1mm Thick Sheet Mild Steel)
Steering Pivots: 100mm x (Ø21mm x NB15 Round Pipe)

Flatbed Felix — PEDAL CAR BUILD

HARE & FORBES MACHINERYHOUSE

www.machineryhouse.com.au

Copyright © 2020 Hare and Forbes Machineryhouse
All rights reserved.

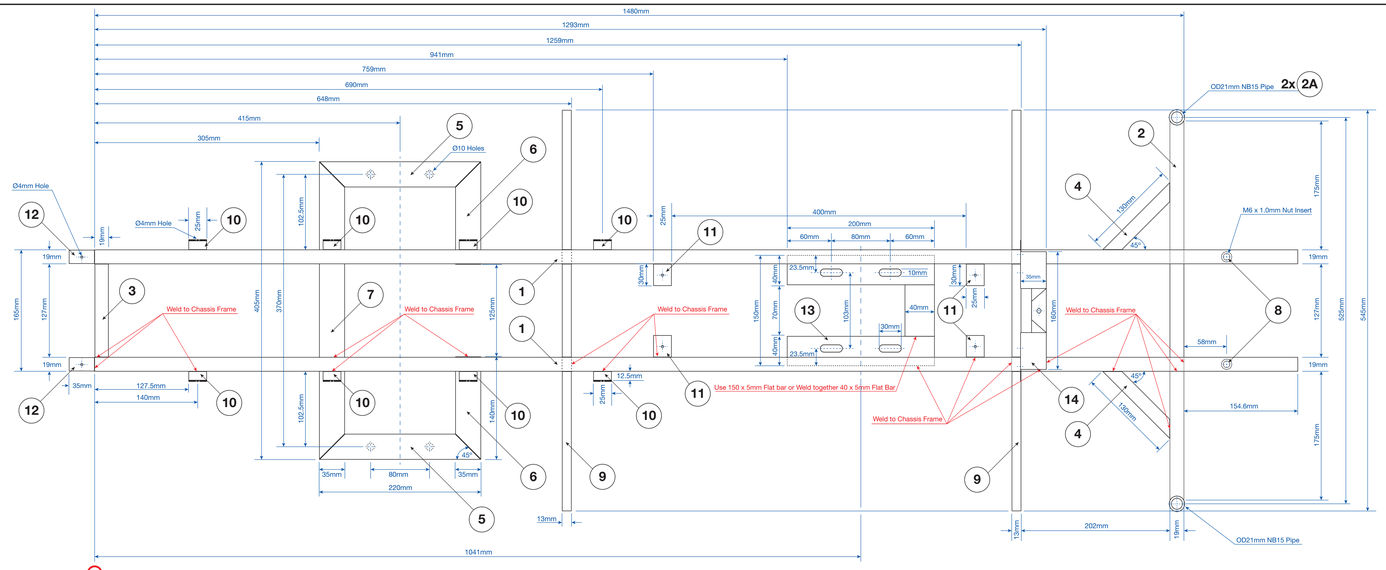


DATUM POINT

## TOP VIEW

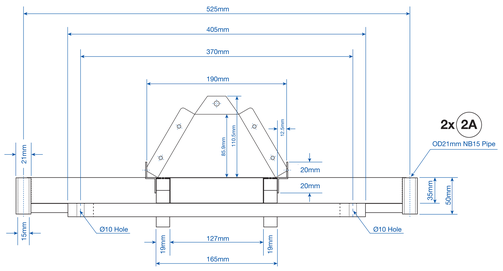


## REAR VIEW

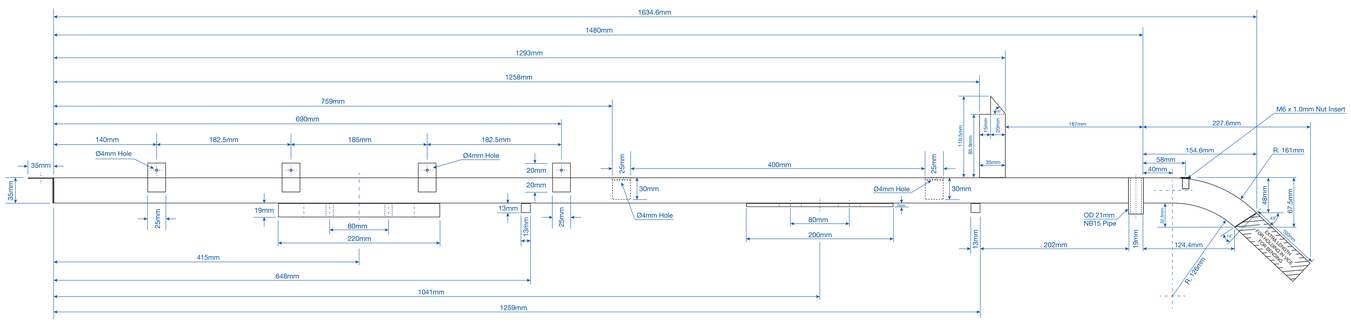


## SIDE VIEW

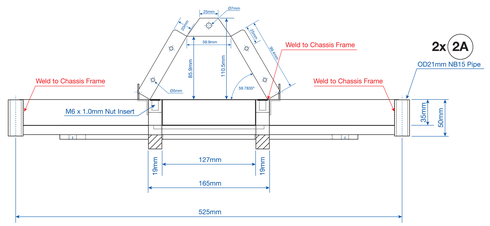


## FRONT VIEW

## PARTS LIST

1x (3)
2x (4)
2x (5)
2x (6)
1x (2)
1x (7)
2x (2A) NB15 Round Pipe, OD 21mm
**Frame:** 34.93x19.05x1.6 ERW Commercial Tube Rectangular Box (RHS)
2x (1)

2x (9) **Running Board Supports:** 2 x 13x13x1.6mm Mill Finish Primed MS Square Box SHS

2x (8) **Metal Nut Inserts**
M6 x 1.0mm

8x (10) **Side Brackets**
1.6mm Thick Sheet Steel

4x (11) **Floor Brackets**
1.6mm Thick Sheet Steel

2x (12) **End Brackets**
1.6mm Thick Sheet Steel

1x (13) **Crank Base Plate**
5mm Thick Sheet Steel

1x (14) **Steering Column Support:** 1mm Thick Sheet Steel

## Steering Column Support - TEMPLATE

1mm Thick Sheet Steel

### FORMING INSTRUCTIONS

1. Use a Folder or Vice Brake Bender
2. Use a Folder or Vice Brake Bender
3. Use a Folder or Vice Brake Bender
4. Use a Vice, Vice Brake Bender or Sheetmetal Wide Vice Grips
5. Use a Folder or Vice Brake Bender - Reverse Fold
6. Use a Folder or Vice Brake Bender - Reverse Fold
7. Weld Joins

1x 14

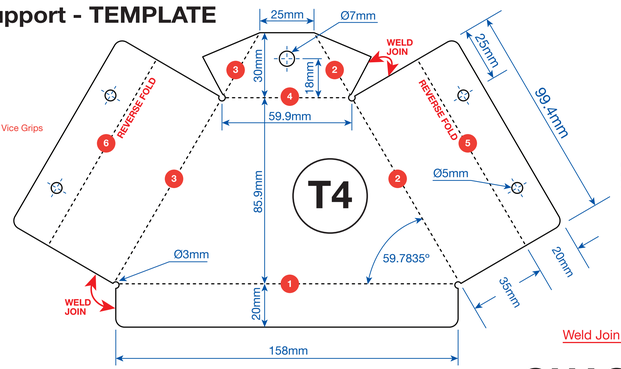


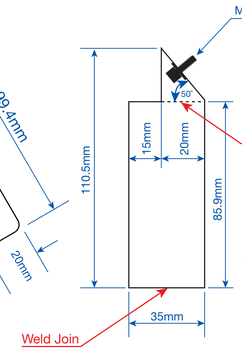


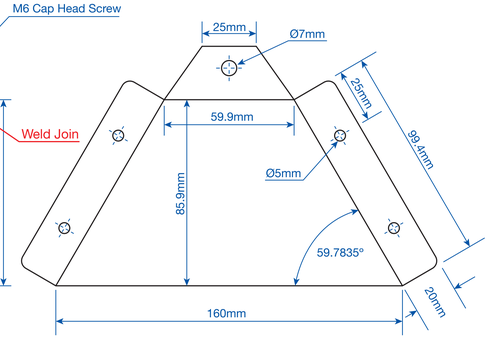


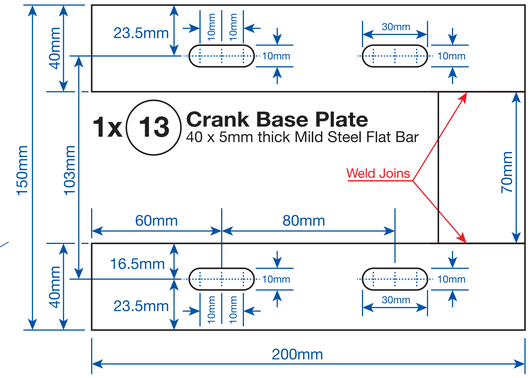


Flatbed Felix — PEDAL CAR BUILD

HARE & FORBES MACHINERYHOUSE

www.machineryhouse.com.au

Copyright © 2020 Hare and Forbes Machineryhouse
All rights reserved.

## Chassis Parts

| TEMPLATE | DRAWING: 2 |
|---|---|
| SCALE: 1:1 | TOLERANCE ± 2mm |

**MATERIALS LIST:**
Chassis: 6000mm (34.93x19.05x1.6 ERW - Tube Rectangular Commercial Box RHS)
Running Board Supports: 1200mm (13x13x1.6mm Mill Finish Primed MS Square Box SHS)
Nut Inserts: 2 x M6 x 1.0mm Metal Nut Inserts
Brackets: 340 x 70 (1.6mm Thick Sheet Mild Steel)
Crank Base Plate: 470mm (40 x 5mm Thick Mild Steel Flat Bar)
Steering Column Support: 260 x 140mm approx (1mm Thick Sheet Mild Steel)
Chassis Nose Bending Template: 107 x 600mm (19mm thick plywood)

0 10 20 30 40 50 60 70 80 90 100 Scale (mm)

## CHASSIS NOSE CUTTING TEMPLATE

28 cuts with a 1mm width blade. Total material to remove is 28mm for bend

T1

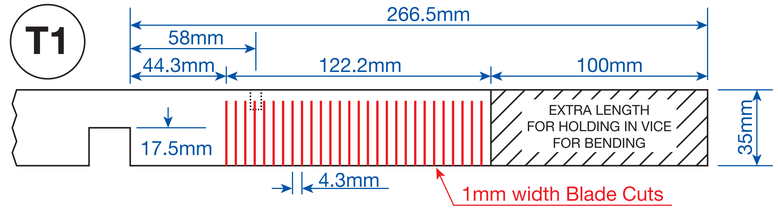


## CHASSIS NOSE CUTTING TEMPLATE

T2

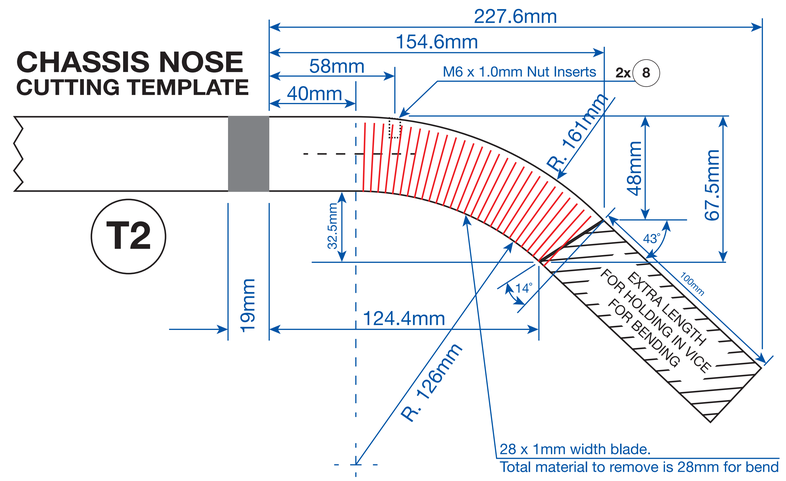


2x 8 **Metal Nut Inserts:**
2 x M6 x 1.0mm

2x 9 **Side Running Board Supports:**
2 x 13x13x1.6mm Mill Finish Primed MS Square Box SHS

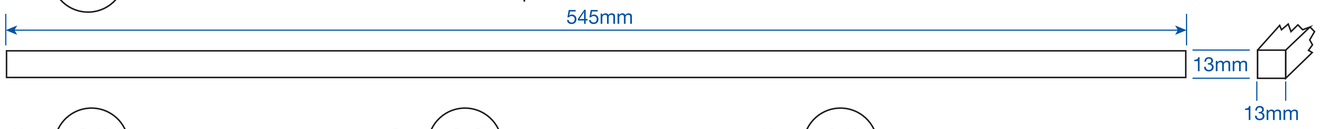


8x 10 **Side Brackets**
1.6mm thick Sheet Steel

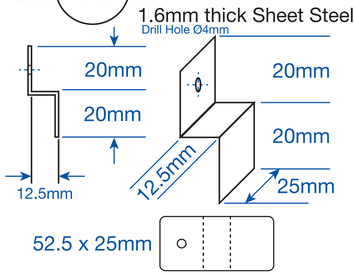


4x 11 **Floor Brackets**
1.6mm thick Sheet Steel

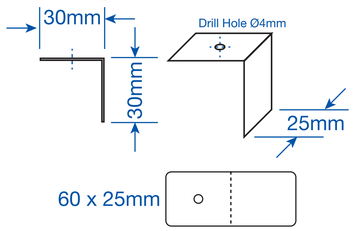


2x 12 **End Brackets**
1.6mm thick Sheet Steel

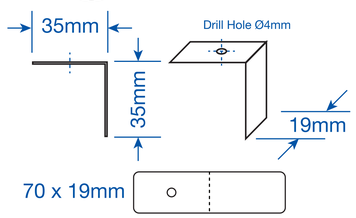


T3

## CHASSIS NOSE BENDING TEMPLATE

Make Template out of 19mm thick plywood

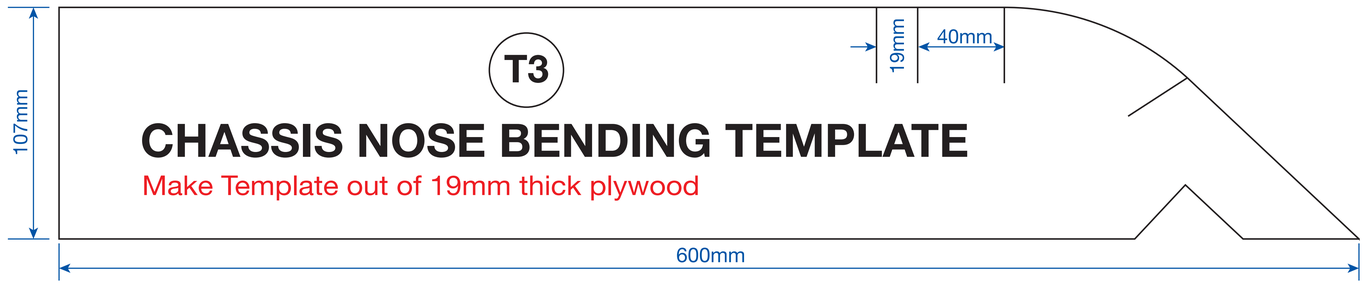


**Chassis Frame:**
34.93x19.05x1.6 ERW - Tube Rectangular Commercial Box (RHS)

1x 3

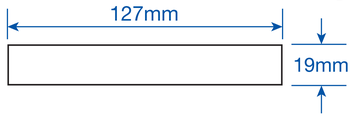


2x 4

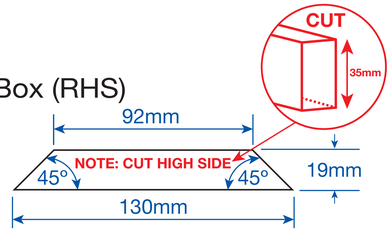


2x 5

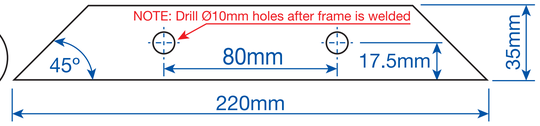


2x 6

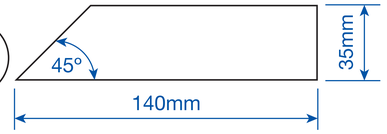


1x 2

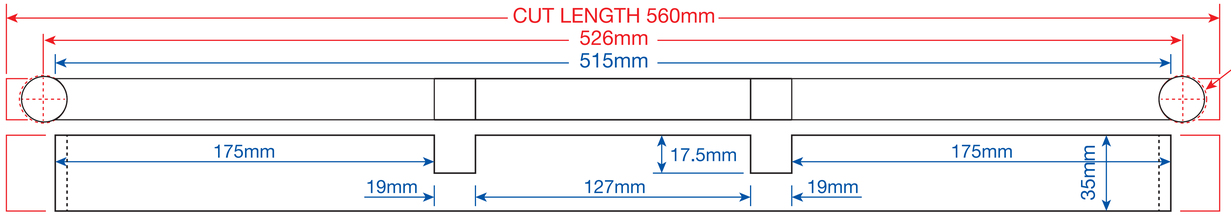


Drill Ø22mm Hole Saw @ 526mm BC to weld on Ø21mm Pipe @ 525mm BC

Steering Pivots

2x 2A

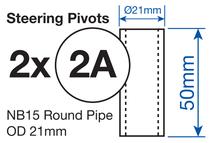


NB15 Round Pipe
OD 21mm

1x 7

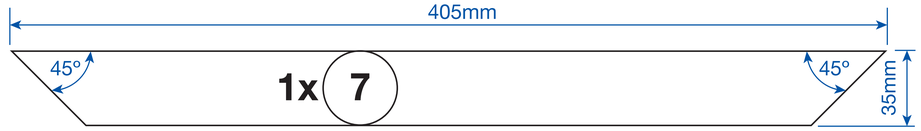


2x 1

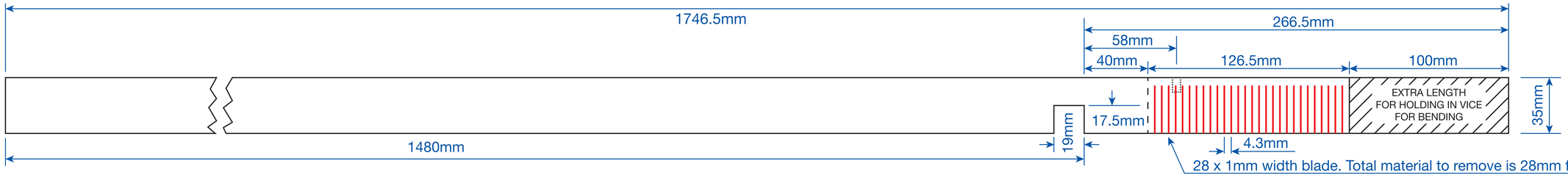

# DRIVE & STEERING ASSEMBLY

| PLAN 2 | DRAWING: 3 |
|---|---|
| SCALE: | TOLERANCE ± 2mm |

Flatbed Felix — PEDAL CAR BUILD

HARE & FORBES MACHINERYHOUSE

www.machineryhouse.com.au

Copyright © 2020 Hare and Forbes Machineryhouse
All rights reserved.

**MATERIALS LIST:**

Steering Wheel:
- Wooden Steering Wheel 2 x (285x285x19mm Pinewood Board)
- 8 x 7G x 20mm Drywall scews + Wood Glue
- Wheel Frame Ø60mm (3mm thick Sheet Steel)
- Wheel Frame 30 x 3mm x 536mm Flat Bar
- Outer Ring 10 x 3mm x 1000mm Flat Bar
- Steering Boss Ø35mm x 30mm (Ø35mm Bright Mild Steel Round Bar 1020)
- 2 x M6x12mm Grub Screws

Steering Column:
- 605mm x (Ø38.1 x 1.6mm Round Commercial ERW Tube CHS)
- 850mm x (Ø10mm Bright Mild Steel Round Bar 1020)
- 50mm x (Ø35 Plastic Bushes)
- 1 x M10 x 1.5mm Dome Nut
- 1 x 3/8"x2"x12G Washer
- 1 x M10 x 1.5mm Nut
- 1 x M10mm x 2mm Washer
- 2 x M6 x 1.0mm Nut Inserts

Steering Brackets:
- 125mm x (3mm x 40mm Flat Bar)
- 45 x 170mm (1.6mm Sheet Steel)
- 2 x M6 x 16mm Socket Cap Head Screws
- 2 x M6 Washers
- 200 x (3mm x 25mm Flat Bar)
- 2 x M8 x 50mm Socket Head Cap Screws
- 2 x M8 x Nylock Nuts
- 4 x M8 x Washers

Front Stub Axles:
- 1200mm x (Ø12.7mm Bright Mild Steel Round Bar 1020)
- 28mm x (Ø20mm Bright Mild Steel Round Bar 1020)
- 2 x (1/2" UNC Nylock Nuts)
- 4 x (1/2" Washers)
- 2 x (1/2" x 5/32" Thick Washers)
- 100mm x (Ø16mm Plastic Conduit)

Crank Axle:
- 225mm x (Ø20mm Bright Mild Steel Round Bar 1020)
- 200mm (5mm x 20mm Flat Bar)
- 3 x (M6 x 6mm Grub Screws)
- 3 x (6 x 6 x 30mm Key Steel)
- 30mm x (Ø35mm Bright Mild Steel Round Bar 1020)
- 15mm (Ø45mm Bright Mild Steel Round Bar 1020)
- 3 x M6 x 16mm SS Button Socket Head Screws
- 232mm (5mm x 32mm Flat Bar) Crank Arms
- 2 x Pedals (80 x 65mm with Ø12.5mm Shaft)

Rear Axle:
- 670mm x (Ø20mm Bright Mild Steel Round Bar 1020)
- 65 x 195mm (5mm thick Mild Steel Plate)
- 90mm x (Ø35mm Bright Mild Steel Round Bar 1020)
- 15mm (Ø45mm Bright Mild Steel Round Bar 1020)
- 3 x M6 x 16mm SS Button Socket Head Screws
- 3 x (M6 x 6mm Grub Screws)
- 3 x (6 x 6 x 30mm Key Steel)
- 3 x M6 x 15mm Socket Head Cap Screws
- 3 x M6 x Nylock Nuts
- 3 x M6 Washers

Bearings:
- 4 x (20mm Bore Pillow Block Bearing)
- 4 x (M10 x 35mm Bolts)
- 4 x (M10 x 50mm Bolts)
- 8 x (M10 Nylock Nuts)
- 8 x (M10 Washers)

Spockets
- Front Sprocket - 15T OD Ø67mm, Ø20mm Bore, 6mm Keyway
- Rear Sprocket - 32T OD Ø132mm, Ø20mm Bore, 6mm Keyway

Chain:
- Bike Chain - 1/2" Pitch, approx Length 1560mm

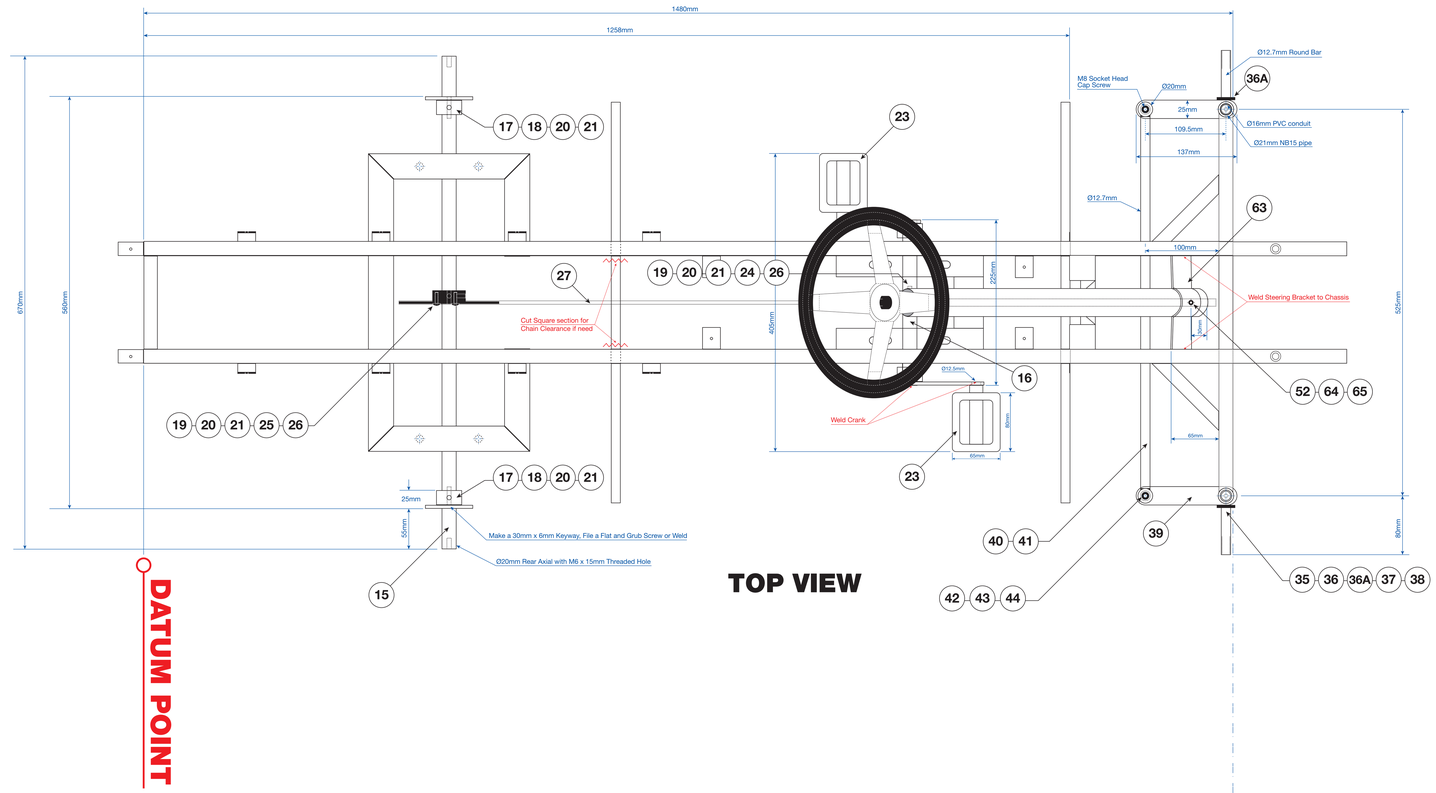


## TOP VIEW

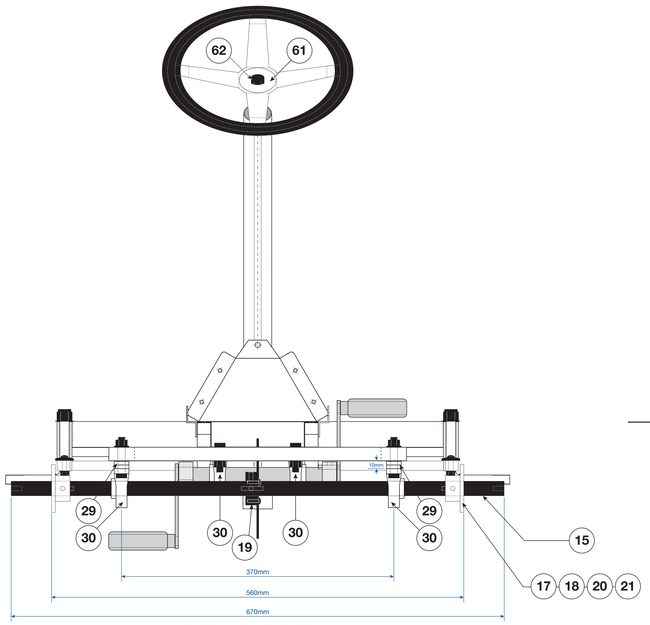


## REAR VIEW

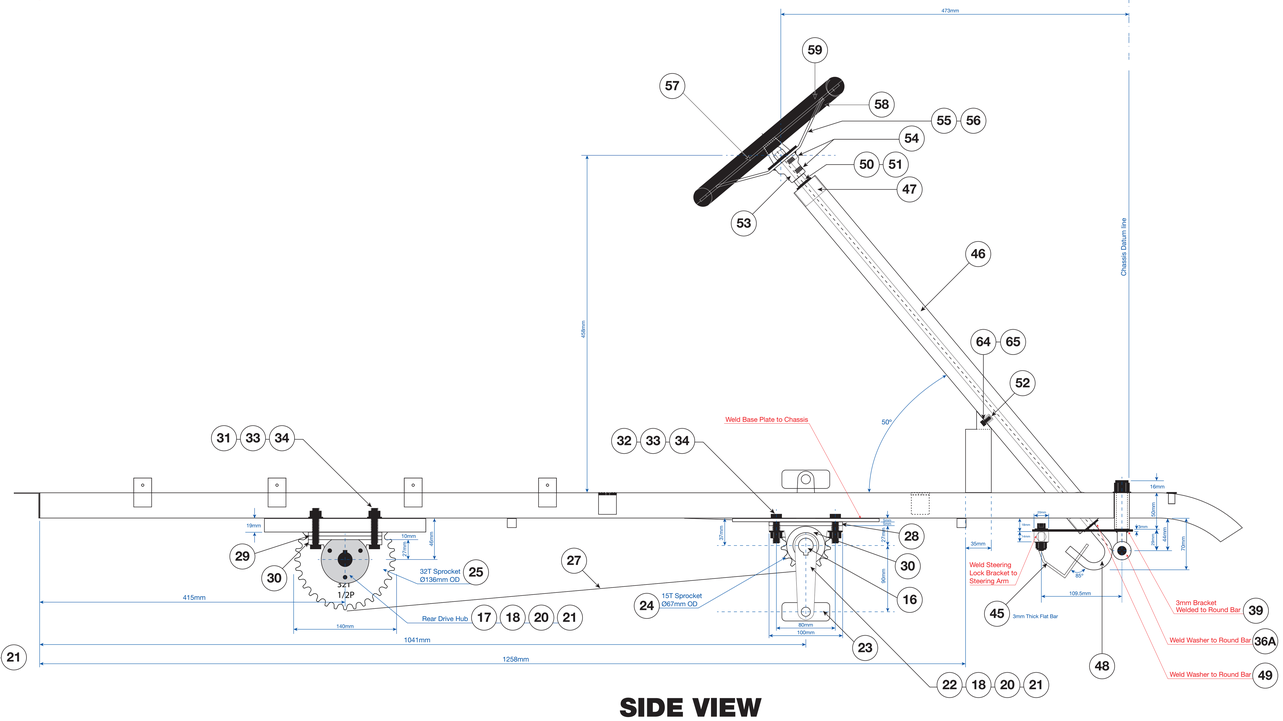


## SIDE VIEW

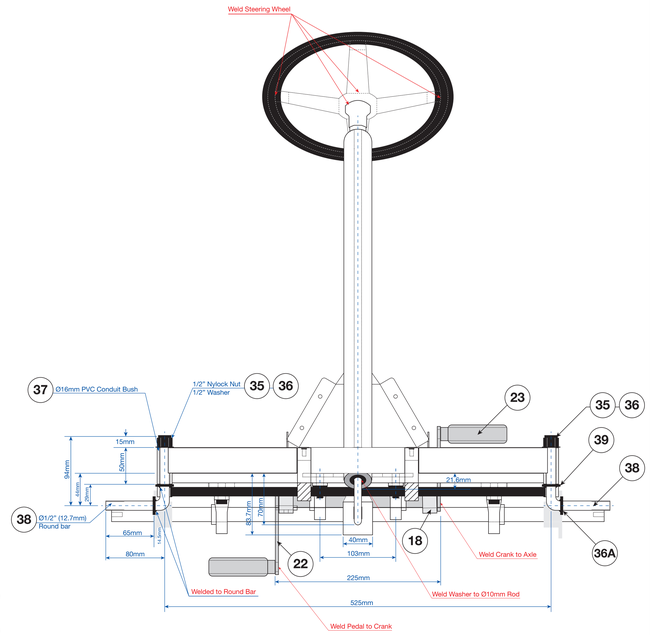


## FRONT VIEW

## PARTS LIST

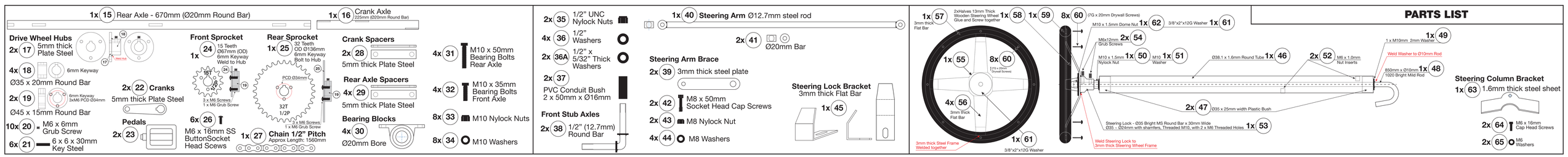

# TEMPLATES
## Drive & Steering Parts

| TEMPLATE | DRAWING: 4 |
|---|---|
| SCALE: 1:1 | TOLERANCE ± 2mm |

Flatbed Felix — PEDAL CAR BUILD

HARE & FORBES MACHINERYHOUSE

www.machineryhouse.com.au

Copyright © 2020 Hare and Forbes Machineryhouse
All rights reserved.

MATERIALS LIST:

Steering Brackets: 125mm x (3mm x 40mm Flat Bar)
260 x 140mm approx. (1mm Sheet Steel)
45 x 145mm (1.6mm Sheet Steel)
2 x M6 x 15mm Socket Head Cap Screws
2 x M6 Washers
200 x (3mm x 25mm Flat Bar)
2 x M8 x 50mm Socket Head Cap Screws
2 x M8 x Nylock Nuts
4 x M8 x Washers

Front Stub Axles: 1200mm x (Ø12.7mm Bright Mild Steel Round Bar 1020)
28mm x (Ø20mm Bright Mild Steel Round Bar 1020)
15mm x (Ø45mm Bright Mild Steel Round Bar 1020)
2 x (1/2" UNC Nylock Nuts)
4 x (1/2" Washers)
2 x (1/2" x 5/32" Thick Washers)
100mm x (Ø16mm Plastic Conduit)
100mm x (Ø21mm x NB15 Round Pipe)
65 x 130 (5mm thick Mild Steel Plate)

Rear Axle: 670mm x (Ø20mm Bright Mild Steel Round Bar 1020)
130 x 130 (5mm thick Mild Steel Plate)
60mm x (Ø35mm Bright Mild Steel Round Bar 1020)
3 x M6 x 16mm SS Button Socket Head Screws
3 x (M6 x 5mm Grub Screws)
3 x (6 x 6 x 30mm Key Steel)

Crank Axle: 225mm x (Ø20mm Bright Mild Steel Round Bar 1020)
60mm x (Ø35mm Bright Mild Steel Round Bar 1020)
15mm x (Ø45mm Bright Mild Steel Round Bar 1020)
200mm (5mm x 20mm Flat Bar)
232mm (5mm x 32mm Flat Bar) for Crank Arms
2 x Pedals (80x65mm with Ø12.5mm Shaft)
3 x M6 x 16mm SS Button Socket Head Screws
3 x (M6 x 5mm Grub Screws)
3 x (6 x 6 x 30mm Key Steel)

Sprockets: Front - 15T OD Ø67mm, Ø20mm Bore, 6mm Keyway
Rear - 32T OD Ø136mm, Ø20mm Bore, 6mm Keyway

Chain: O6B Transmission Roller Chain approx Length 1560mm

0 10 20 30 40 50 60 70 80 90 100 Scale (mm)

## 1x 40 Steering Arm Ø12.7mm Steel Rod

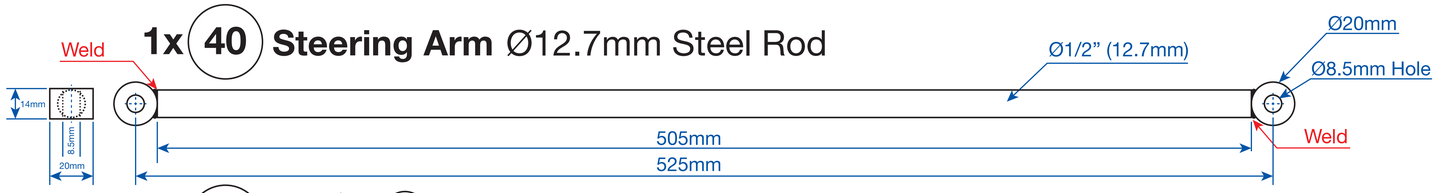


## 2x 41

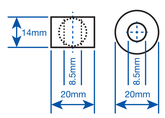


## Steering Arm Braces

2x 39 3mm thick steel plate

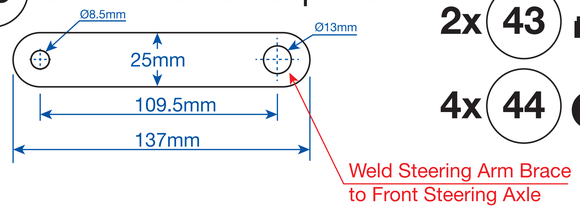


2x 42 M8 x 50mm (Cut to suit) Socket Head Cap Screw

2x 43 M8 Nylock Nut

4x 44 M8 Washers

## PVC Conduit Bush

50mm x OD Ø16mm x ID Ø12.7mm

2x 37

## Front Stub Axles

2x 38

1/2" (12.7mm) Round Bar

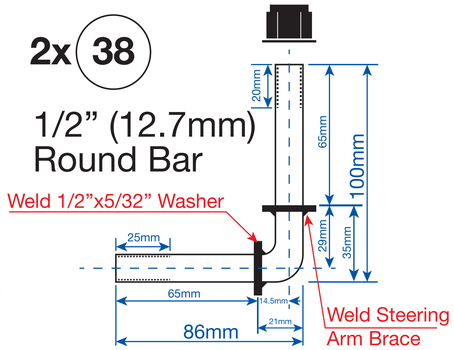


4x 35 1/2" UNC Nylock Nuts

4x 36 1/2" Washers

2x 36A 1/2" x 5/32" Thick Washers

## Drive Hubs

2x 17 5mm thick Plate Steel

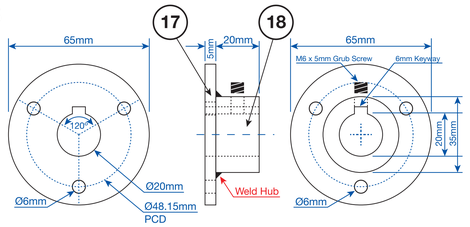


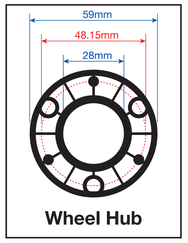


4x 18 Ø35mm x 20mm wide Round Bar with 6mm keyway

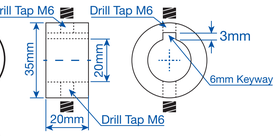


10x 20 M6 x 5mm Grub Screw

6x 21 6 x 6 x 30mm Key

## Front Hub Caps

2x 67 5mm thick Plate Steel

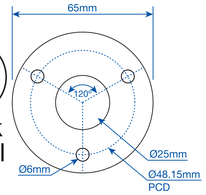


## Rear Hub Caps

2x 68 5mm thick Plate Steel

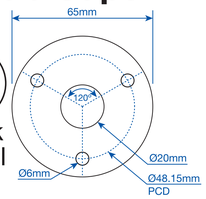


2x 28

## Crank Bearing Spacers

5mm thick Plate Steel

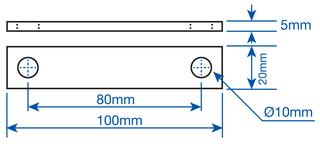


4x 29

## Rear Axle Bearing Spacers

5mm thick Plate Steel

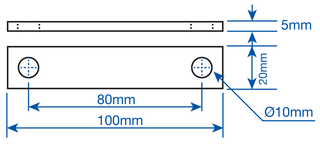


## Hubs

2x 19

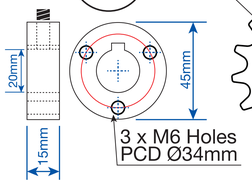


6mm Keyway
20mm Bore
M6 Grub Screw
3xM6 PCD Ø34mm
Ø45mm Mild Steel Bar

## Front Sprocket

1x 24 15T x 3mm plate Ø67mm (OD) 6mm Keyway Weld to Hub

PCD Ø34mm

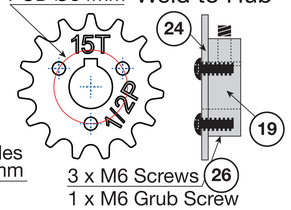


## Rear Sprocket

1x 25 32T x 3mm plate OD Ø136mm 6mm Keyway Bolt to Hub

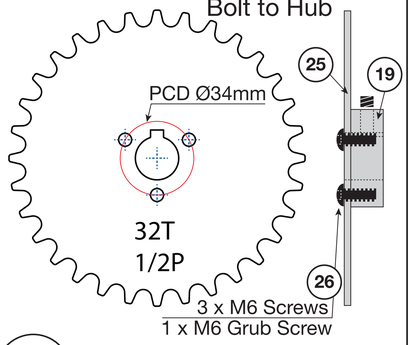


6x 26 M6 x 16mm SS Button Socket Head Screw

1x 27 Chain 1/2" Pitch
Approx: 122 Links, 1560mm

2x 22 Cranks
5mm thick Plate Steel

## Pedals

2x 23

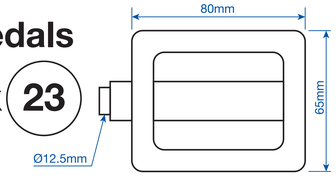


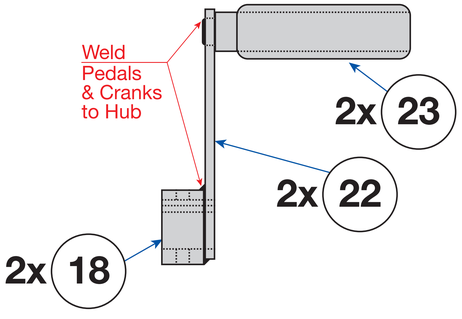


## Steering Lock Bracket

3mm thick Flat Bar

1x 45

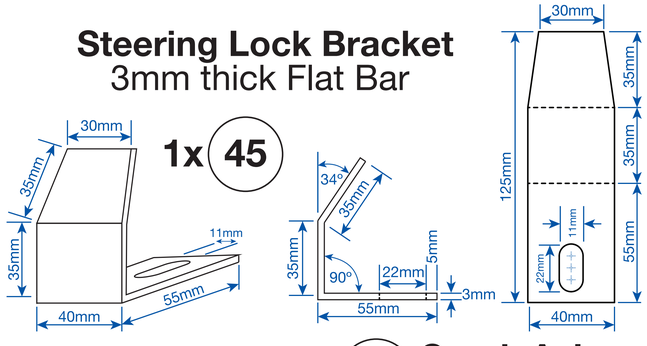


CUT MATERIAL

125mm

40mm

1x 15 Rear Axle
670mm (Ø20mm Round Bar with 6mm keyways)

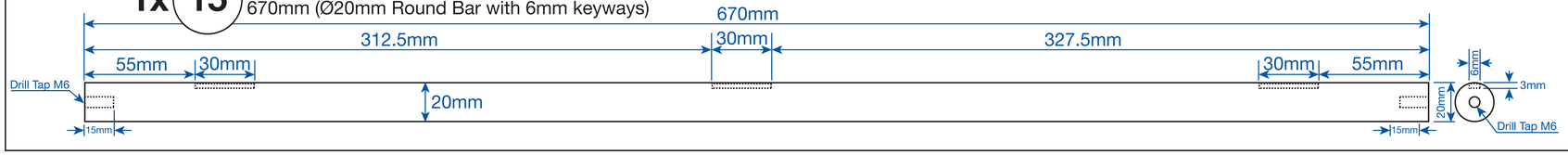


1x 16 Crank Axle
225mm (Ø20mm Round Bar with 6mm keyways)

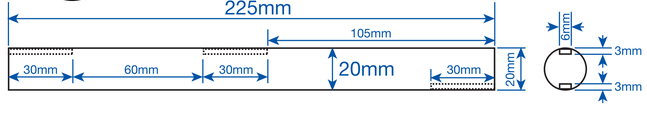

# STEERING WHEEL METAL FRAME
## 3mm thick steel

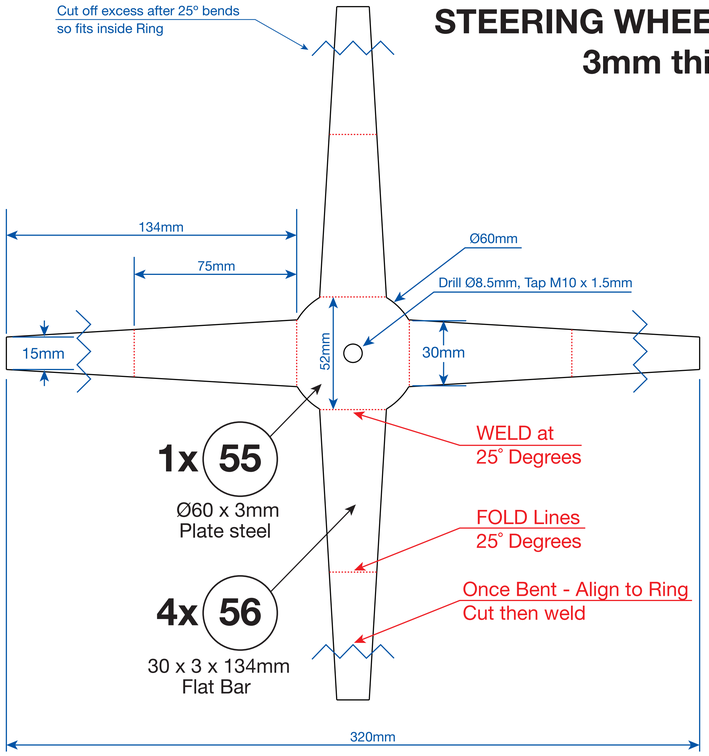


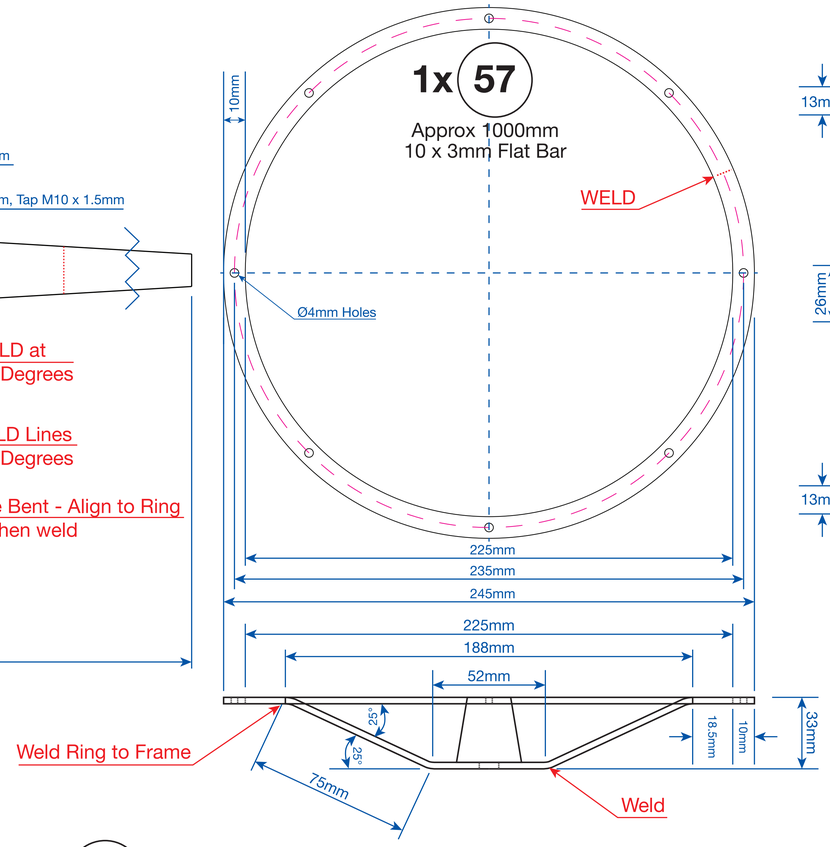


REFER to A3 Router Guide Sheet for more info

# STEERING WHEEL
## 19mm thick Pinewood board

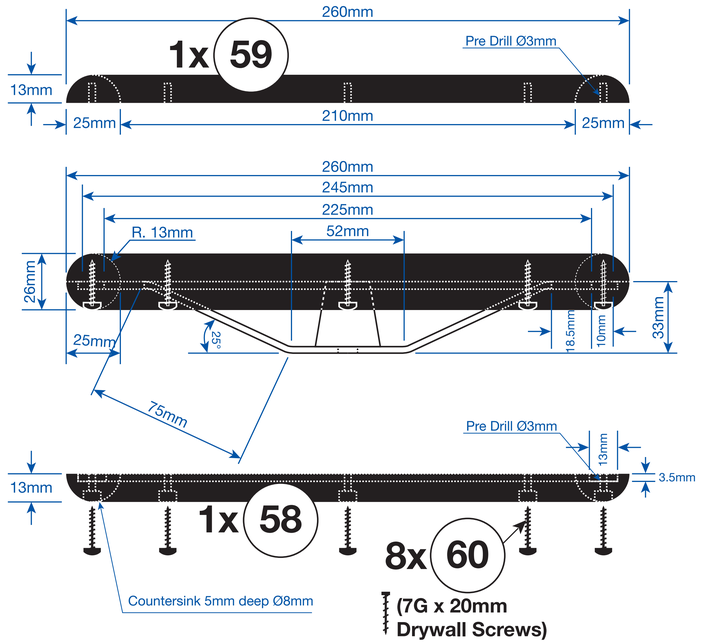


**TEMPLATES**
**Steering Column & Wheel**

| TEMPLATE | DRAWING: 5 |
|---|---|
| SCALE: 1:1 | TOLERANCE ± 2mm |

Flatbed Felix — PEDAL CAR BUILD

HARE & FORBES MACHINERYHOUSE

www.machineryhouse.com.au

Copyright © 2020 Hare and Forbes Machineryhouse
All rights reserved.

**MATERIALS LIST:**

Steering Wheel:
- Wooden Steering Wheel 2 x (285x285x19mm Pinewood Board)
- 8 x 7G x 20mm Drywall screws + Wood Glue
- Wheel Frame Ø60mm (3mm thick Sheet Steel)
- Wheel Frame 30 x 3mm x 536mm Flat Bar
- Outer Ring 10 x 3mm x 1000mm Flat Bar
- Steering Lock Ø35mm x 30mm (Ø35mm Bright Mild Steel Round Bar 1020)
- 2 x M6x12mm Grub Screws

Steering Column:
- 605mm x (Ø38.1 x 1.6mm Round Commercial ERW Tube CHS)
- 850mm x (Ø10mm Bright Mild Steel Round Bar 1020)
- 50mm x (Ø35 Plastic Bushes)
- 1 x M10 x 1.5mm Dome Nut
- 1 x 3/8"x2"x12G Washer
- 1 x M10 x 1.5mm Nylock Nut
- 1 x M10mm x 2mm Washer
- 2 x M6 x 1.0mm Nut Inserts

Steering Brackets:
- 125mm x (5mm x 40mm Flat Bar)
- 45 x 170mm (1.6mm Sheet Steel)
- 2 x M6 x 16mm Socket Head Cap Screws
- 2 x M6 Washers
- 200 x (3mm x 25mm Flat Bar)

0 10 20 30 40 50 60 70 80 90 100 Scale (mm)

## 1x 53 Steering Wheel Boss

Ø35 Bright MS Round Bar x 30mm Long
Ø35 ~ Ø24mm with shamfers, Threaded M10 x 1.5mm, with 2 x M6 Threaded Holes for Grub Screws

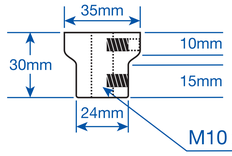


2x 54 M6x10mm Grub Screws

## Steering Column Bracket

1x 63 1.6mm thick steel sheet

Weld Bracket to Chassis
see Plan 2

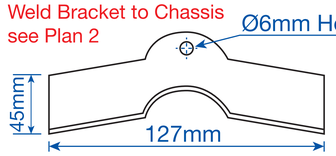


**CUT MATERIAL**
Bend Centre then Cut ends to Fit 127mm Wide
45mm
170mm

2x 64 M6 x 16mm Cap Head Screws
2x 65 M6 Washers

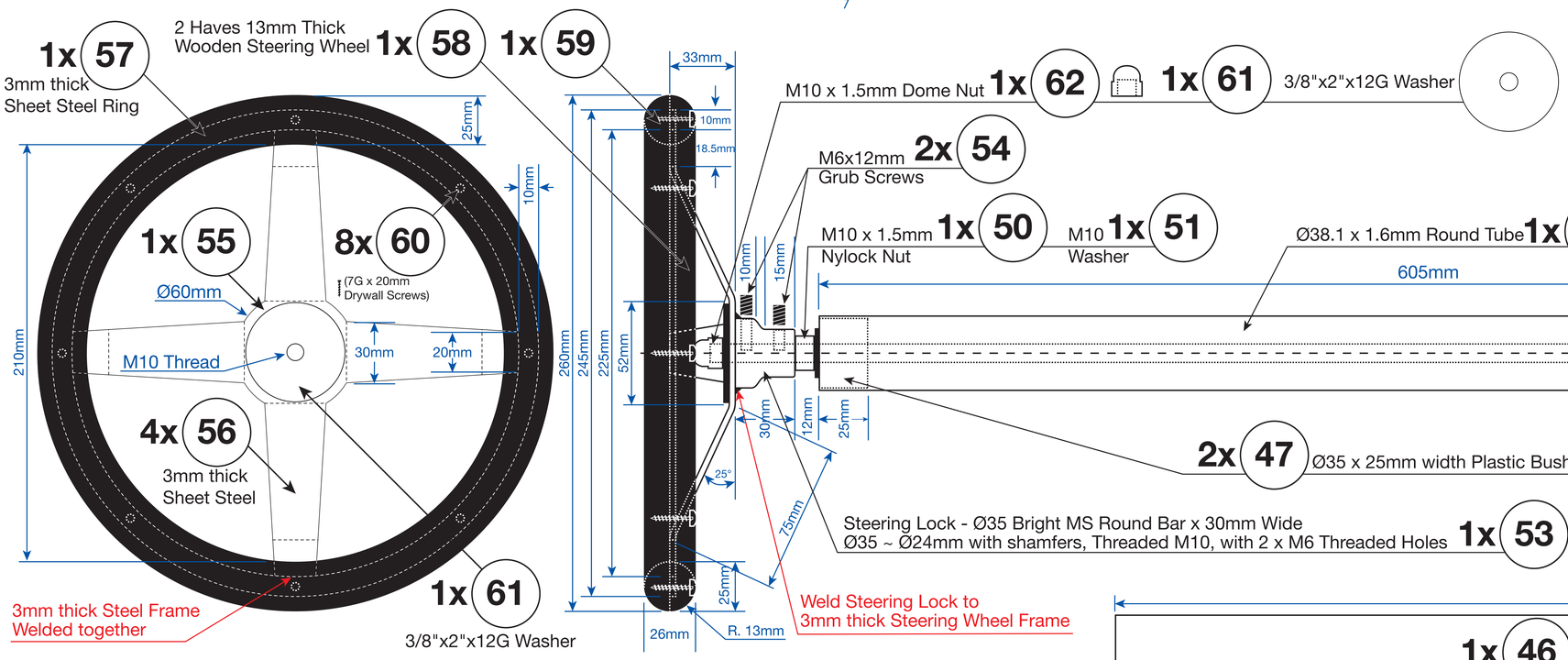


M10 x 1.5mm Dome Nut 1x 62
1x 61 3/8"x2"x12G Washer
M6x12mm 2x 54
Grub Screws
M10 x 1.5mm 1x 50
Nylock Nut
M10 1x 51
Washer
Ø38.1 x 1.6mm Round Tube 1x 46
2x 52 M6 x 1.0mm Nut Inserts
1x 49
M10 x 24mm x 2mm
Washer
605mm
35mm
Weld Washer to Ø10mm Rod
2x 47 Ø35 x 25mm width Plastic Bush
30.5mm
30mm
54mm
25mm
4mm
200mm
55mm
1x 48
850mm x Ø10mm
1020 Bright Mild Rod
Steering Lock - Ø35 Bright MS Round Bar x 30mm Wide
Ø35 ~ Ø24mm with shamfers, Threaded M10, with 2 x M6 Threaded Holes 1x 53

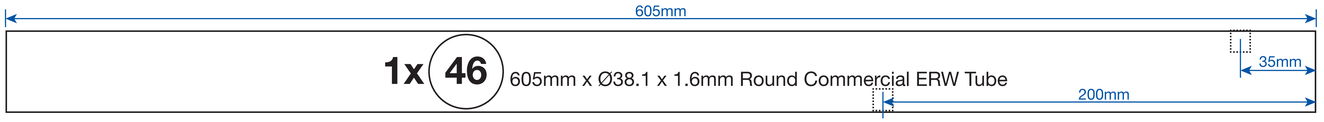


1x 46 605mm x Ø38.1 x 1.6mm Round Commercial ERW Tube

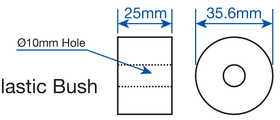


2x 47 Ø35.6 x 25mm width Plastic Bush

M10 x 1.5mm Thread
1x 48 850mm x Ø10mm Bright Mild Rod 1020

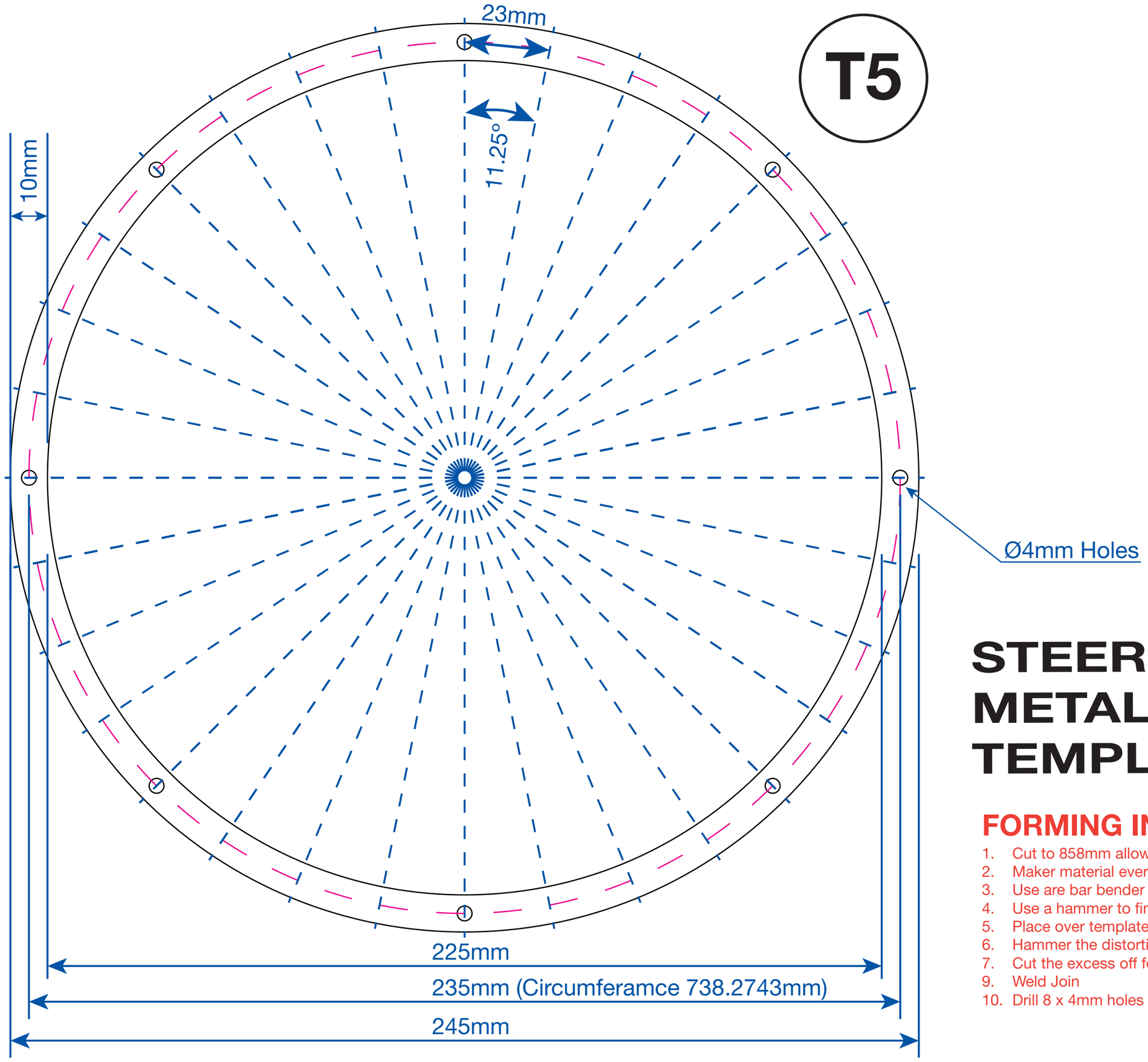


T5

**STEERING WHEEL RING TEMPLATE**

| TEMPLATE | DRAWING: 6 |
|---|---|
| SCALE: 1:1 | TOLERANCE ± 2mm |

**MATERIALS LIST:**
10 x 3mm thick Flat Bar (1000mm)

Flatbed Felix
PEDAL CAR BUILD

HARE & FORBES MACHINERYHOUSE
www.machineryhouse.com.au

Copyright © 2020 Hare and Forbes Machineryhouse
All rights reserved.

0 10 20 30 40 50
Scale (mm)

# STEERING WHEEL METAL RING TEMPLATE

## FORMING INSTRUCTIONS

1. Cut to 858mm allowing 60mm clamping either side of the 738mm
2. Maker material every 23mm to make up 738mm
3. Use are bar bender to bend 11.25˚ every 23mm increments
4. Use a hammer to finally correct the angle over vice jaws
5. Place over template till to get a perfect radius
6. Hammer the distortion flat
7. Cut the excess off for perfect join
9. Weld Join
10. Drill 8 x 4mm holes

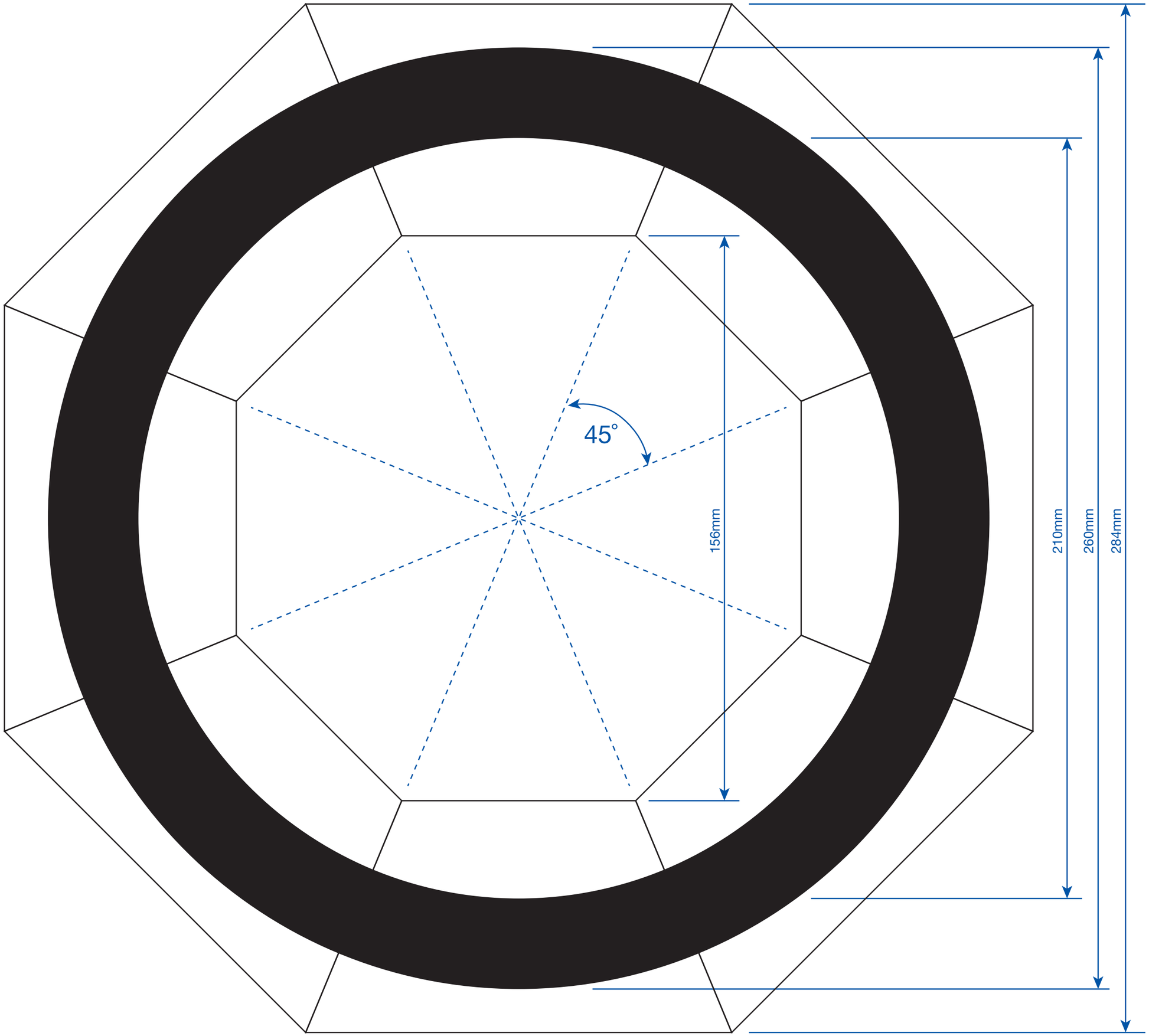


# STEERING WHEEL
## Octagon - Template

| TEMPLATE | DRAWING: 7 |
|---|---|
| SCALE: 1:1 | TOLERANCE ± 2mm |

**MATERIALS LIST:**
64 x 19 x 1200mm Premium Pine (8 x Octagon shapes)
(Top & Bottom of Steering Wheel 58 & 59)

Octagon Inner Guide - 200 x 200 x 19mm Plywood (RIG)

Router Base Guide - 400 x 400mm x 19mm Plywood (RBG)

M8 x 60mm Hex Head Zinc Bolt (RG1)
M8 Washer (RG2)
M8 nut & washers for Centre of Router Guide (RG3)

Wood Glue

Flatbed Felix
PEDAL CAR BUILD

HARE & FORBES MACHINERYHOUSE
www.machineryhouse.com.au

Copyright © 2020 Hare and Forbes Machineryhouse
All rights reserved.

0 10 20 30 40 50
Scale (mm)

T6

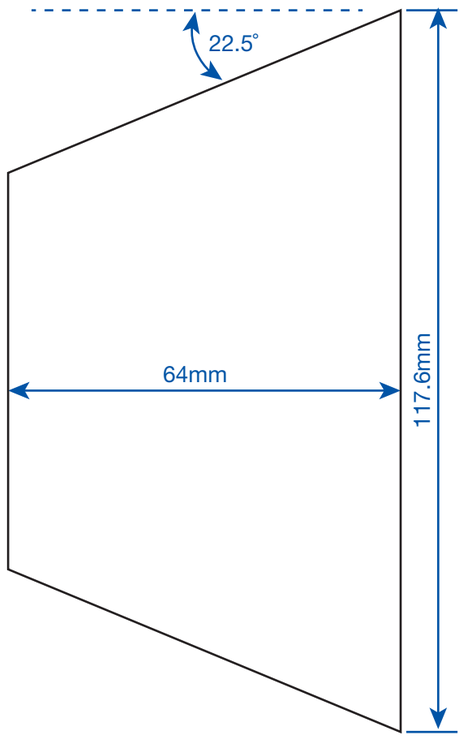

# T7 STEERING WHEEL ROUTER GUIDE

| STEERING WHEEL ROUTER GUIDE | |
|---|---|
| TEMPLATE | DRAWING: 8 |
| SCALE: 1:1 | TOLERANCE ± 2mm |

Flatbed Felix — PEDAL CAR BUILD

**MATERIALS LIST:**
Router Guide: 230 x 163mm (3mm thick Sheet MS)
Steering Wheel - 2 x (285 x 285 x 19mm Pinewood Boards)

Router Base Guide - 400 x 400mm x 19mm Plywood (RBG)

M8 x 60mm Hex Head Zinc Bolt (RG1)
M8 Washer (RG2)
M8 nut & washers for Centre of Router Guide (RG3)

HARE & FORBES MACHINERYHOUSE
www.machineryhouse.com.au

Copyright © 2020 Hare and Forbes Machineryhouse
All rights reserved.

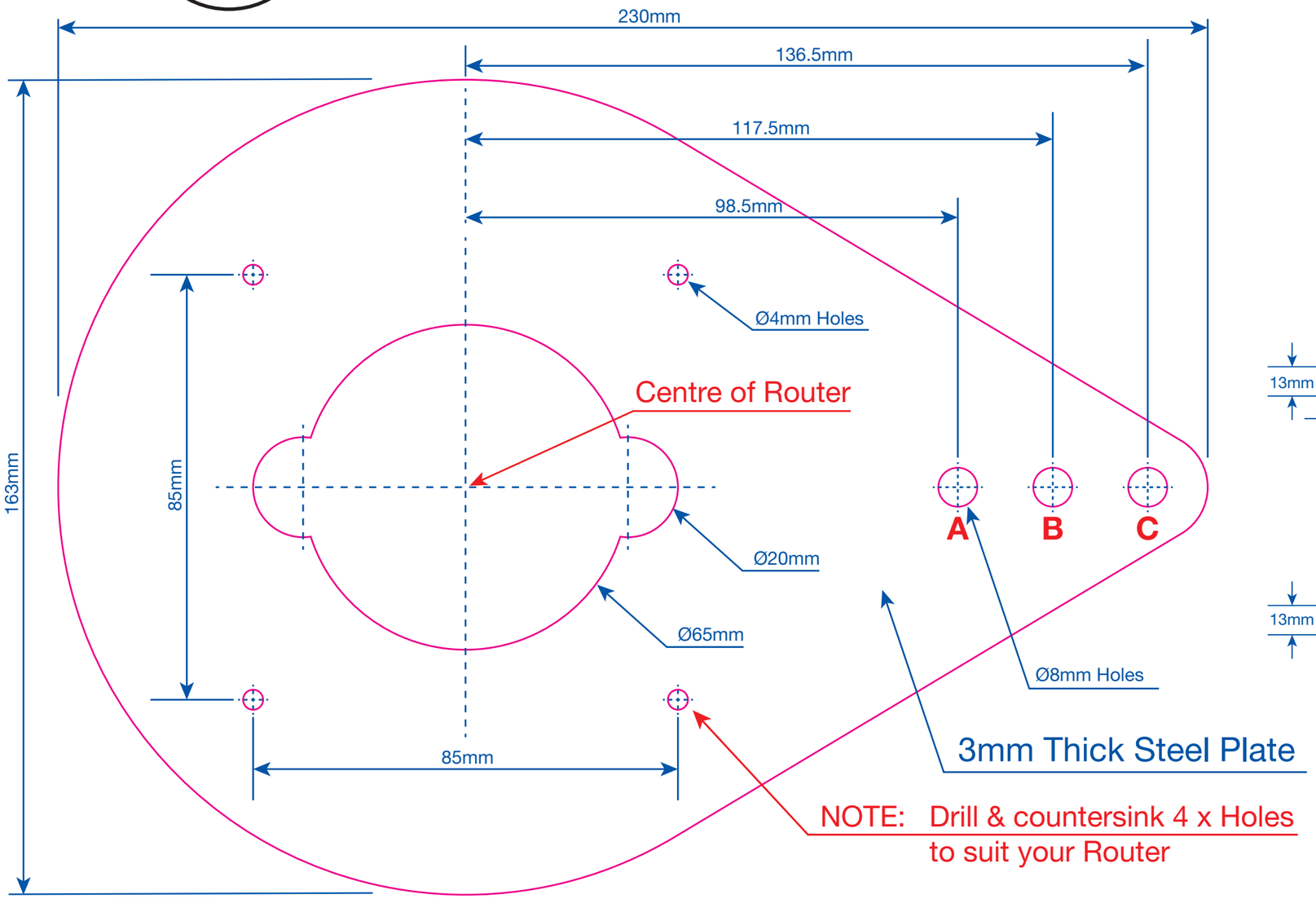


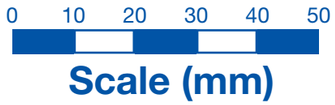


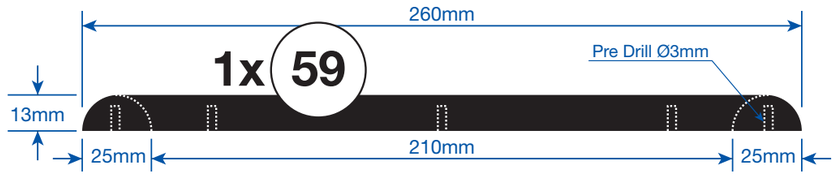


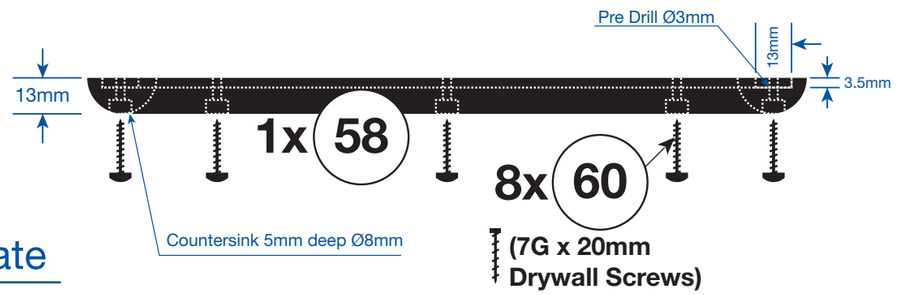


**Wooden Steering Wheel (2 x Halves) - Step by Step Instructions using Router Guide (Guide for 19mm Thick Plywood)**

1. Setup Guide in (Hole C, 136.5mm) - use a 13mm straight Cutter. Cut Outer Diameter to Ø260mm
2. Setup Guide in (Hole A, 98.5mm) - use a 13mm straight Cutter. Plunge 14mm depth Inner Diameter to Ø210mm
3. Setup Guide in (Hole C, 136.5mm & Hole A, 98.5mm) - use a 13mm Radius Cutter with no Roller. Radius Outer Ø260mm & Inner Ø210mm Diameter Edges

**FLIP over**

4. (1 Half Only) Setup Guide in (Hole B, 117.5mm) - use a 13mm straight Cutter. Plunge 3.5mm and router cut slot for the 3mm thick Metal plate Ring
5. Setup Guide in (Hole C, 136.5mm & Hole B, 117.5mm) - use a 19mm straight Cutter. Thickness material down to leave 13mm of Material at bottom
6. Setup Guide in (Hole A, 98.5mm) - use a 19mm straight Cutter. Thickness material down to leave 13mm Material at bottom, *Wheel will breakaway from JIG
7. (Bottom Half Only). Cut 4 x 20mm Slots for Metal Ring Arms - using a sharp chisel. NOTE: do by hand only, do not use a hammer.
   Drill 8 x 3mm Holes, use 8mm Drill to countersink for screw heads. Screw together 2 Wheel halves. Glue/screw varnish once frame is painted.

# WHEELS, WOOD BASE & BULKHEAD ASSEMBLY

| PLAN 3 | DRAWING: 9 |
|---|---|
| SCALE: | TOLERANCE ± 2mm |

Flatbed Felix — PEDAL CAR BUILD

HARE & FORBES MACHINERYHOUSE

www.machineryhouse.com.au

Copyright © 2020 Hare and Forbes Machineryhouse
All rights reserved.

**MATERIALS LIST:**

Cab: 558 x 885mm (12mm AA Grade Mixed Hardwood Marine Plywood)

Buck: 320 x 340mm (12mm AA Grade Mixed Hardwood Marine Plywood)
8 x (8G x 20mm Chipboard Screws)
4 x (7G x 20mm Panhead Drywall Screws)

Top Cap: 558mm (42 x 30mm Pine DAR Timber)
4 x (8G x 25mm Chipboard Screws)
Timber Glue

Wooden Chassis & Cross Rails: 4400mm x (90 x 45mm Untreated Pine Framing Timber)
10 x (8G x 25mm Stitch Button Screws)
8 x (100mm Batten Bulge Head Timber Screws)

Floor Base: 499 x 170mm (12mm AA Grade Mixed Hardwood Marine Plywood)
4 x (8G x 13mm Galvanised Stitching Screws)

Kick Board: 650 x 190mm (12mm AA Grade Mixed Hardwood Marine Plywood)
6 x (8G x 25mm Chipboard Screws)

Wheels: 4 x (Syneco 378 x 378 x 51mm Plastic Centre Wheels & Bushes Ø20/Ø28x9mm)

Rear Wheel End Screws: 2 x M6 x 16mm Socket Head Cap Screws
2 x 1/4" x 1 1/4" Washers
3 x M6 Washers
3 x M6 x 70mm Socket Head Cap Screws
3 x M6 Nylock Nuts
3 x M6 x 35mm Socket Head Cap Screws

Front Wheel End Screws: 2 x 1/2" UNC Nylock Nuts
2 x 1/2" Washers
6 x M6 x 35mm Socket Head Cap Screws

Wheel Hub Caps: 4 x Ø65mm 5mm thick steel Hubs

Dash: 440 x 208mm (1mm thick sheet steel)
4 x (Ø3.2mm pop rivets)
4 x (M5 Nut inserts)
2 x (M5 x 25mm Countersunk Head Socket Screws)
2 x (M5 x 35mm Countersunk Head Socket Screws)

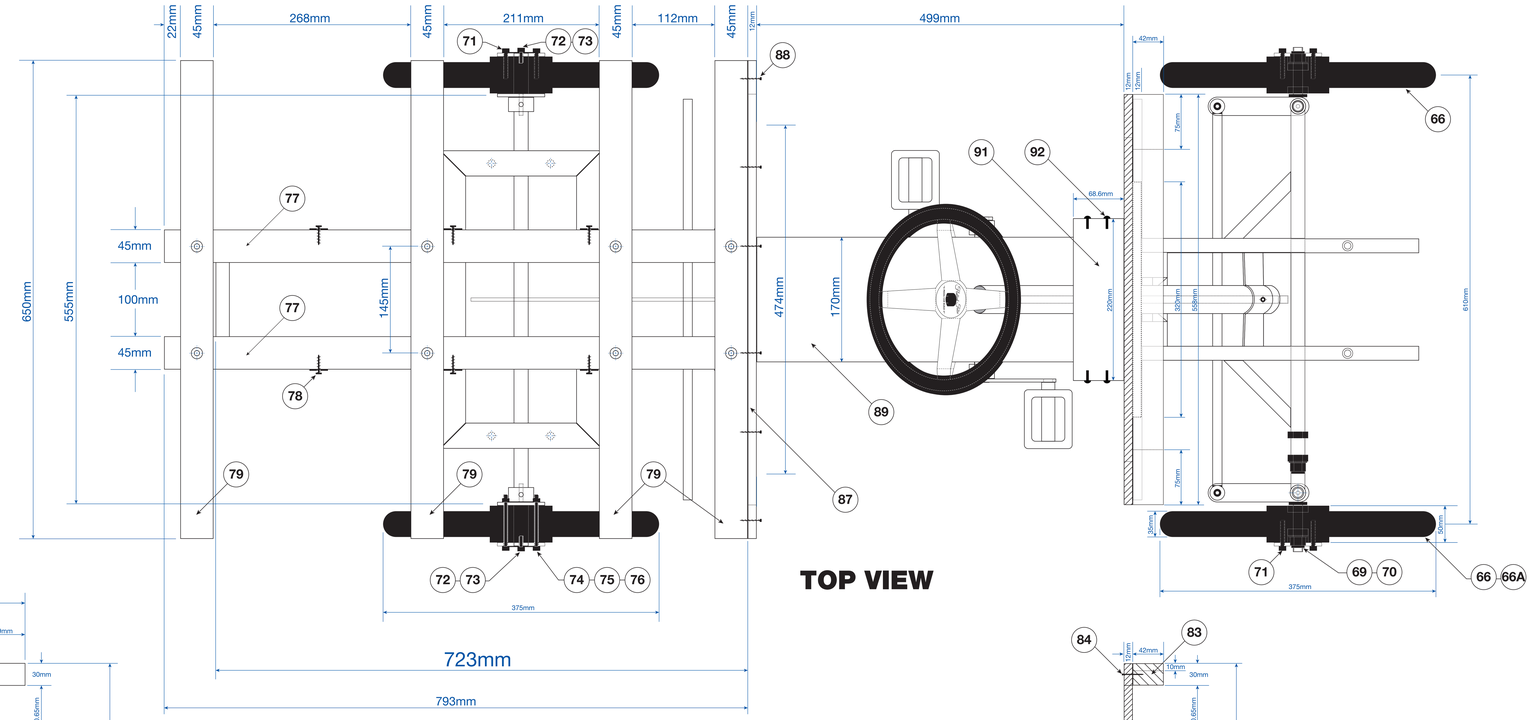


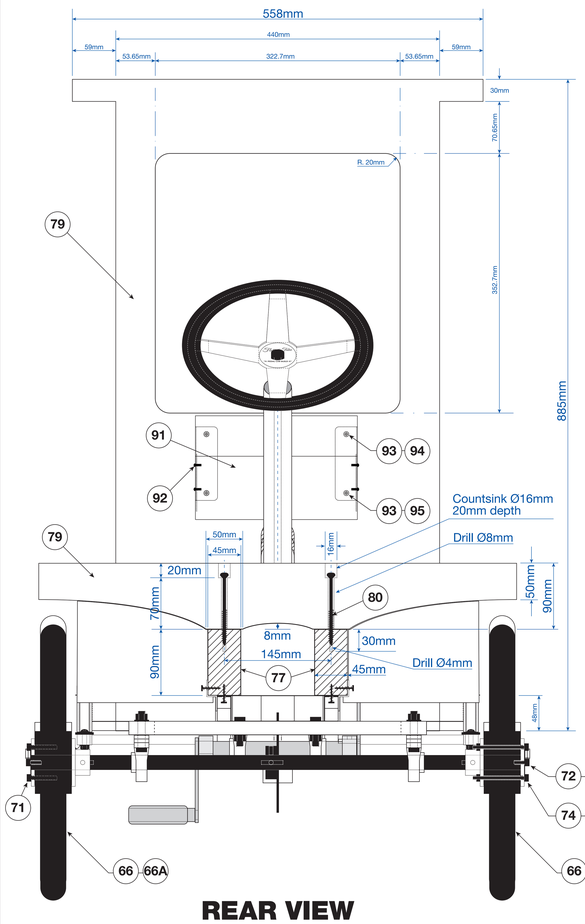


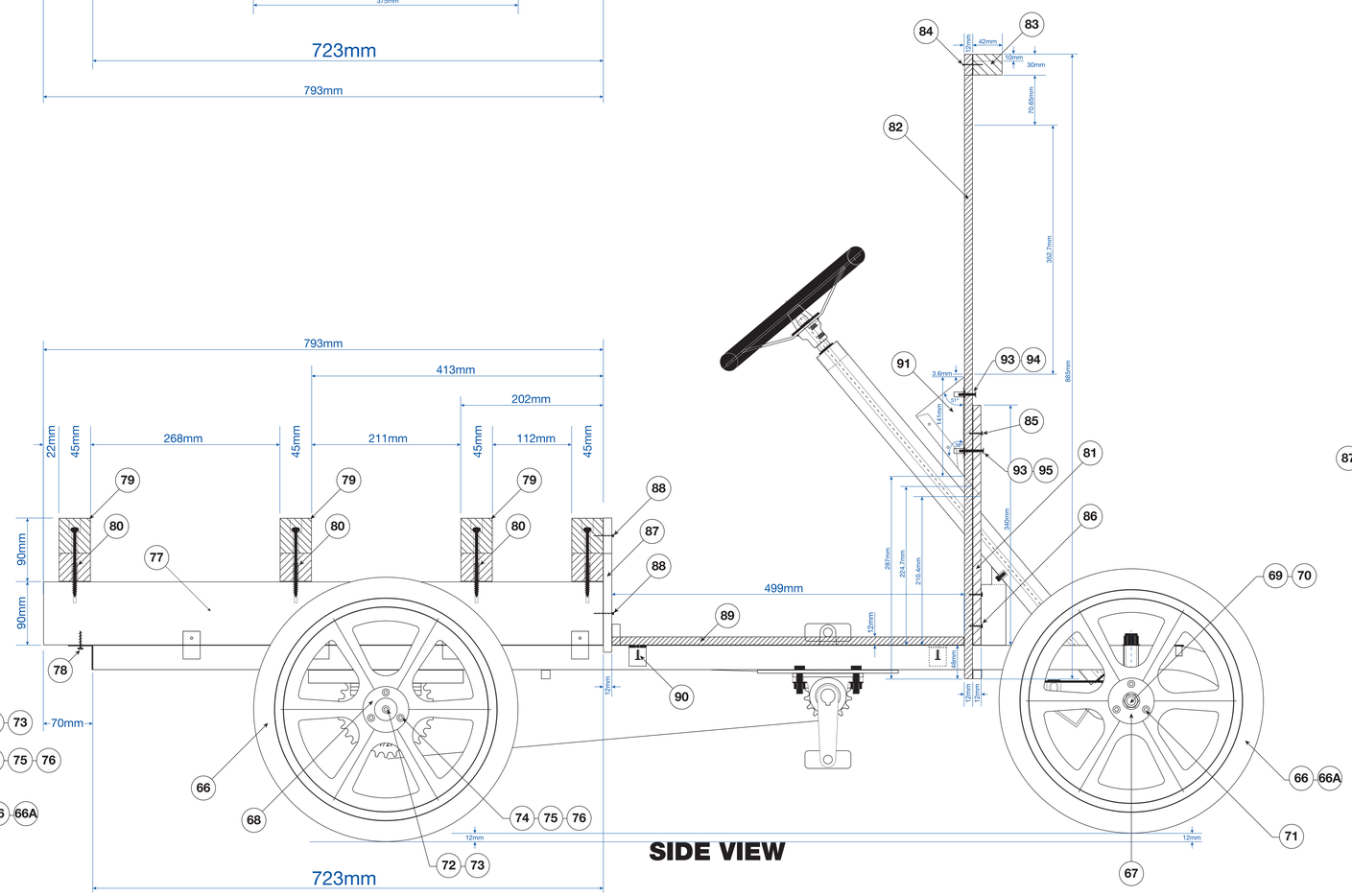


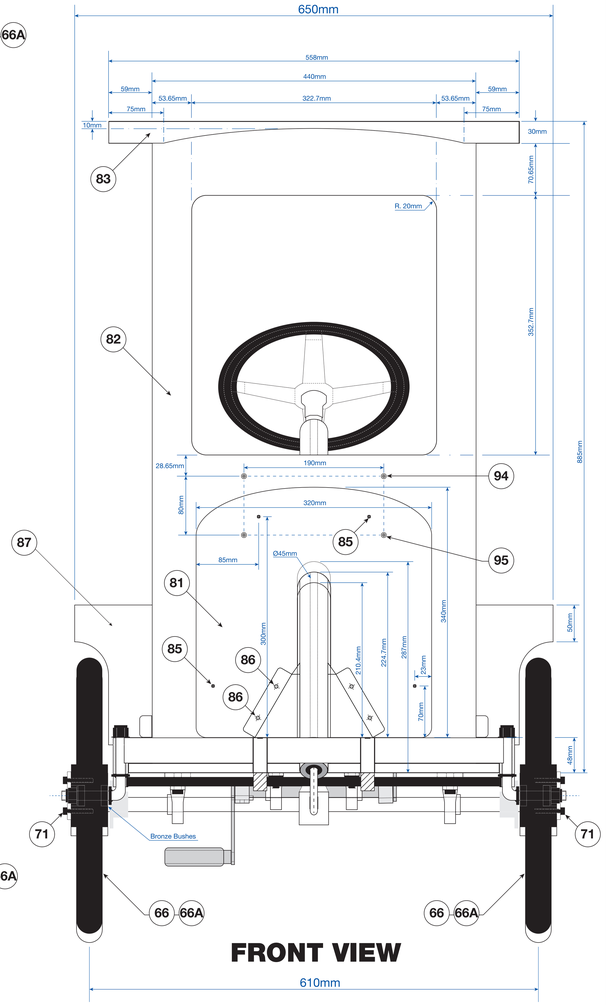


## PARTS LIST

4x (66) Wheels
Syneco 378x378x51mm Plastic Centre Wheels
4x (66A) Bronze Bushing ID Ø20 / OD Ø28mm x 9mm wide

Front Hub Caps
2x (67)

Rear Hub Caps
2x (68)

2x (69) 1/2" UNC Nylock Nuts
2x (70) 1/2" Washers
9x (71) M6 x 35mm Socket Head Cap Screws
2x (72) M6 x 16mm Socket Head Cap Screws
2x (73) 1/4" x 1 1/4" Washers
3x (74) M6 x 70mm Socket Head Cap Screws
3x (75) M6 Nylock Nuts
3x (76) M6 Washers

2x (77) Wooden Chassis Rails 2 x 793 (90 x 45mm Untreated Pine Framing Timber)
10x (78) (8G x 25mm Stitching Button Head Screws)

4x (79) Wooden Cross Rails 4 x 650mm (90 x 45mm Untreated Pine Framing Timber)

8x (80) TImber Screws 100mm Batten Bulge Head Timber Screws

8x (85) 8G x 20mm Chipboard Screws

1x (81) Firewall

1x (82) Bulkhead
12mm AA Grade Mixed Hardwood Marine Plywood

4x (86) 7G x 20mm Panhead Drywall Screws

1x (83) Top Cap
42 x 30mm Pine DAR Timber

Mount Top Cap to Cab with Glue & Screws

4x (84) 8G x 25mm Chipboard Screws

1x (87) Kick Board
12mm AA Grade Mixed Hardwood Marine Plywood

6x (88) 8G x 25mm Chipboard Screws

1x (89) Timber Floor
12mm AA Grade Mixed Hardwood Marine Plywood

4x (90) (8G x 13mm Galvanised Stitching Screws)

1x (91) Dash
1mm Thick Sheet Steel

4x (92) Ø3.2mm Pop Rivets
4x (93) M5 x 0.8mm Nut Rivet Inserts
2x (94) M5 x 25mm Countersunk Head Socket Head Screws
2x (95) M5 x 35mm Countersunk Head Socket Head Screws

**Mount Top Rail to Firewall/Bulkhead with Glue & screws**

4x (84) 8G x 25mm Chipboard Screws

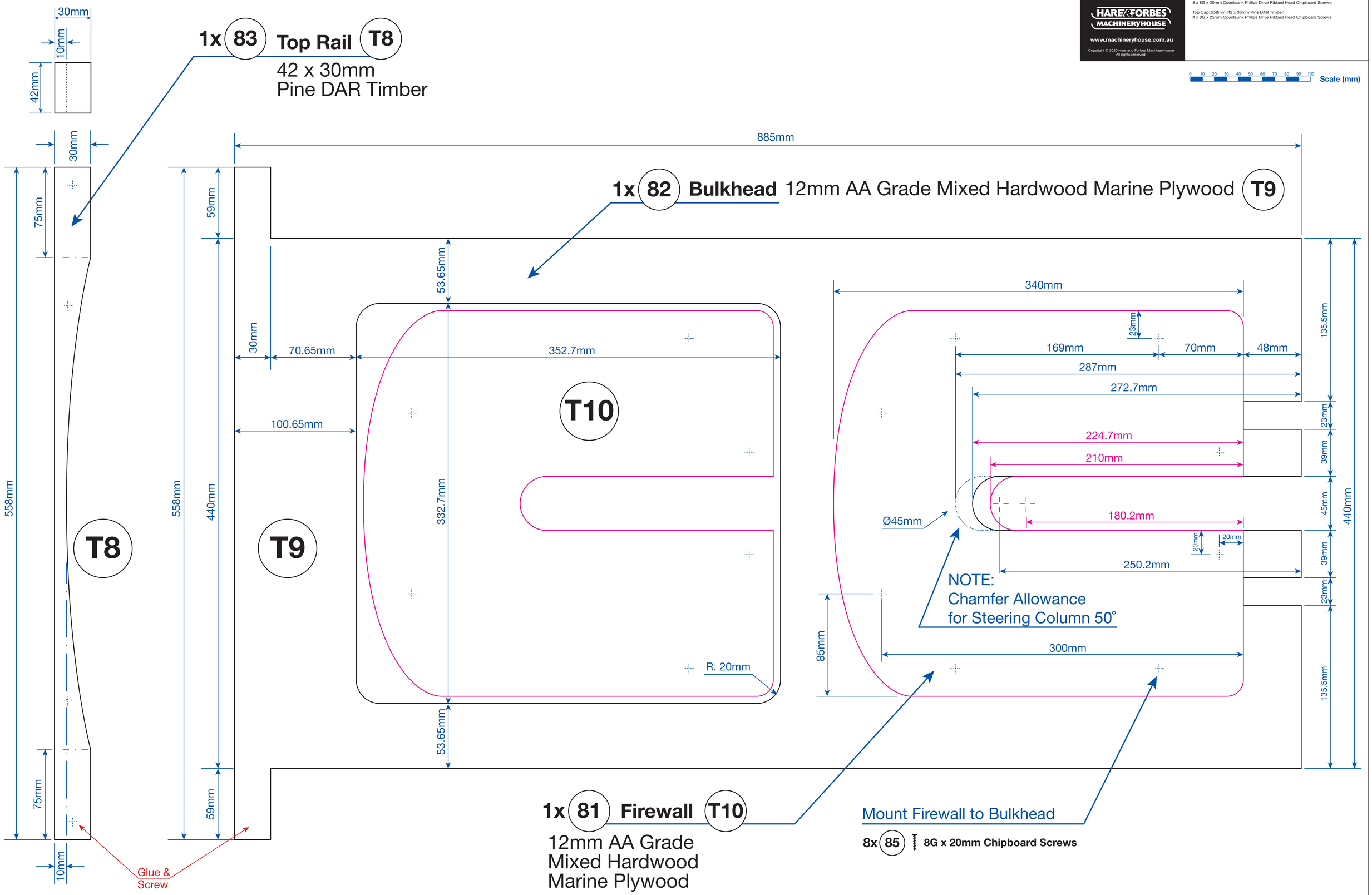


# TEMPLATES
## Firewall, Bulkhead, Top Rail

| | |
|---|---|
| TEMPLATE | DRAWING: 10 |
| SCALE: 1:1 | TOLERANCE ± 2mm |

**MATERIALS LIST:**
Bulkhead: 558 x 885mm x (12mm AA Grade Mixed Hardwood Marine Plywood)
Firewall: 320 x 340mm x (12mm AA Grade Mixed Hardwood Marine Plywood)
8 x 8G x 20mm Countsunk Philips Drive Ribbed Head Chipboard Screws

Top Cap: 558mm (42 x 30mm Pine DAR Timber)
4 x 8G x 25mm Countsunk Philips Drive Ribbed Head Chipboard Screws

Flatbed Felix PEDAL CAR BUILD

HARE & FORBES MACHINERYHOUSE

www.machineryhouse.com.au

Copyright © 2020 Hare and Forbes Machineryhouse
All rights reserved.

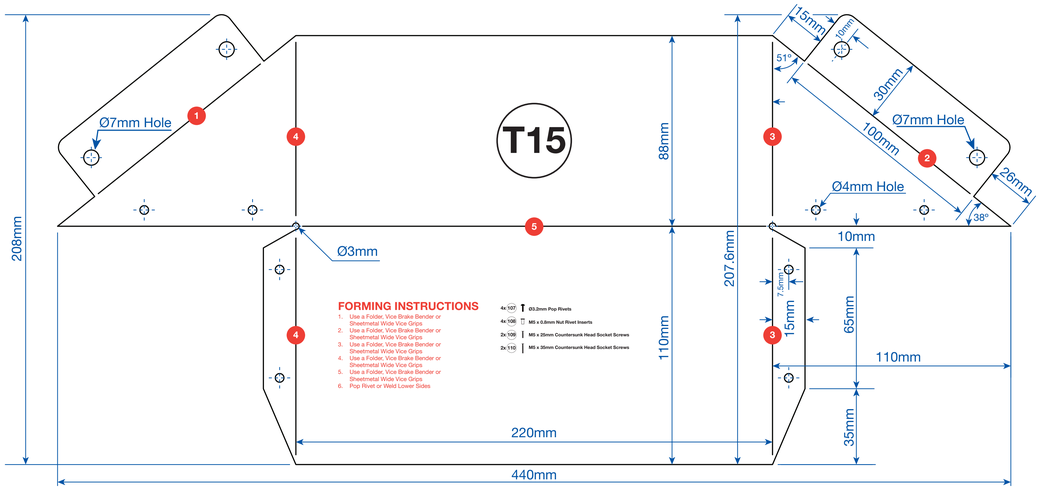


## Dash 1x 91 1mm Thick Sheet Steel

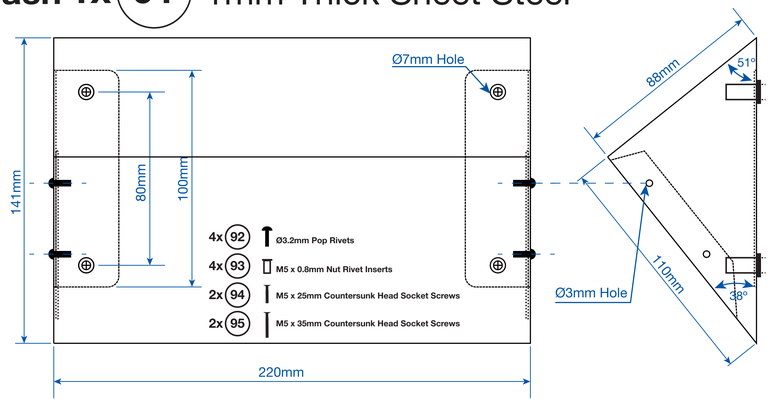


**TEMPLATES**
**Wood Rails, Floor, Dash**

| TEMPLATE | DRAWING: 11 |
|---|---|
| SCALE: 1:1 | TOLERANCE ± 2mm |

Flatbed Felix — PEDAL CAR BUILD

HARE & FORBES MACHINERYHOUSE
www.machineryhouse.com.au

Copyright © 2020 Hare and Forbes Machineryhouse
All rights reserved.

**MATERIALS LIST:**
Timber Chassis & Cross Rails: 4400mm x (90 x 45mm Untreated Pine Framing Timber)

Floor Base: 499 x 170mm (12mm AA Grade Mixed Hardwood Marine Plywood)
4 x (8G x 13mm Galvanised Stitching Screws)

Kick Board: 650 x 190mm (12mm AA Grade Mixed Hardwood Marine Plywood)
6 x (8G x 30mm Chipboard Screws)

Dash: 440 x 208mm (1mm thick sheet steel)
4 x (Ø3.2mm pop rivets)
4 x (M5 Nut inserts)
2 x (M5 x 25mm Countersunk Head Socket Screws)
2 x (M5 x 35mm Countersunk Head Socket Screws)

Wheel Hub Caps: 4 x (Ø65mm x 5mm thick steel Hubs)

Rear Wheel End Screws: 2 x M6 x 15mm Button Head Socket Screws
2 x M6 x 32mm Washers
3 x M6 Washers
3 x M6 x 70mm Button Head Socket Screw
3 x M6 Nylock Nuts
3 x M6 x 35mm Button Head Socket Screws

Front Wheel End Screws: 2 x 1/2" UNC Nylock Nuts
2 x 1/2" Washers
6 x M6 x 35mm Button Head Socket Screws

0 10 20 30 40 50 60 70 80 90 100 Scale (mm)

## Front Hub Caps 2x 67

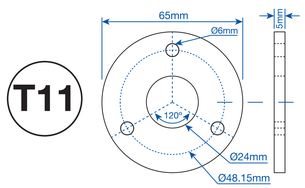


2x 69 1/2" UNC Nylock Nuts
2x 70 1/2" Washers
6x 71 M6 x 35mm Socket Head Cap Screw

## Rear Hub Caps 2x 68

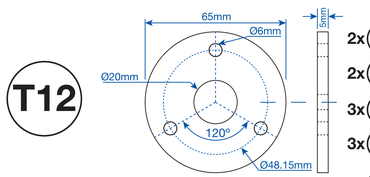


2x 72 M6 x 15mm Socket Head Cap Screw
2x 73 M6 x 32mm Washers
3x 74 M6 x 70mm Socket Head Cap Screw & Nut
3x 75 M6 Nylock Nuts 3x 76 M6 Washers
3x 71 M6 x 35mm Socket Head Cap Screw

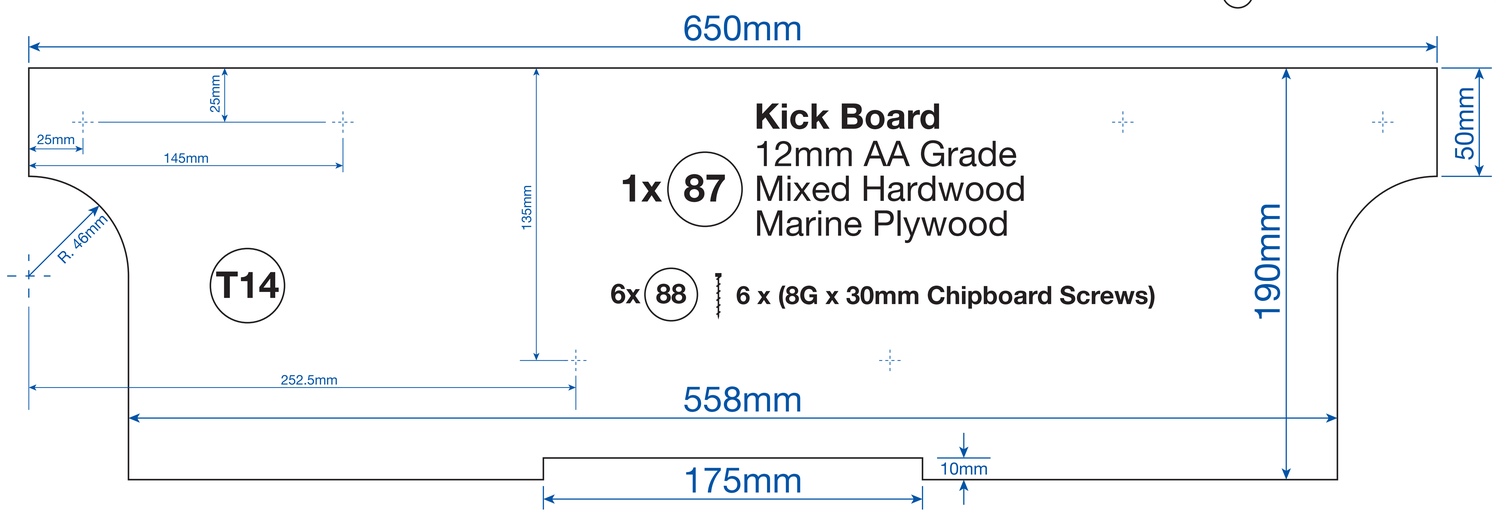


**Kick Board**
1x 87 12mm AA Grade Mixed Hardwood Marine Plywood

6x 88 6 x (8G x 30mm Chipboard Screws)

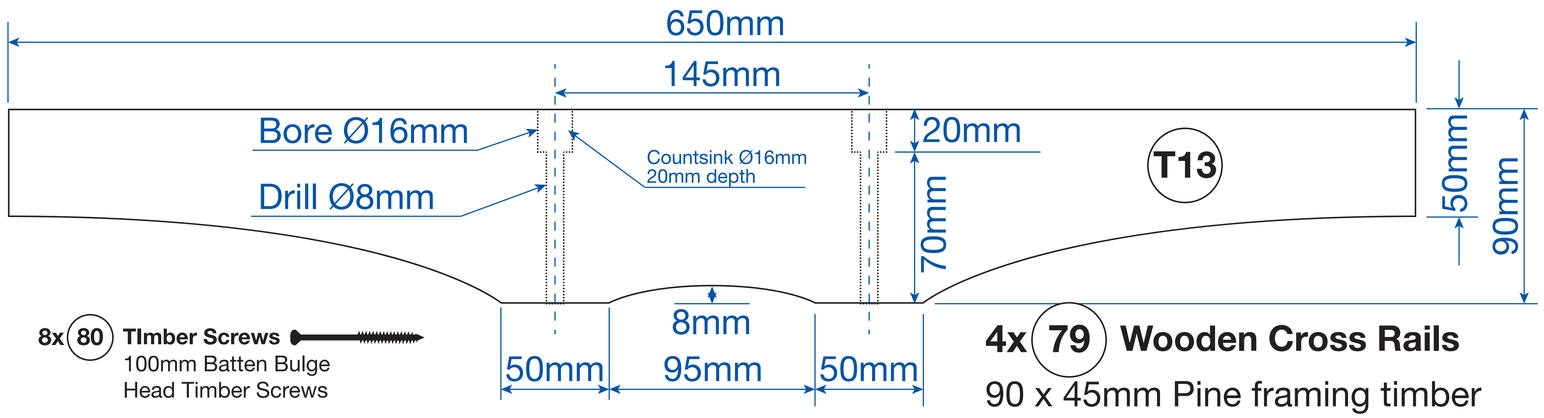


8x 80 Timber Screws
100mm Batten Bulge Head Timber Screws

4x 79 Wooden Cross Rails
90 x 45mm Pine framing timber

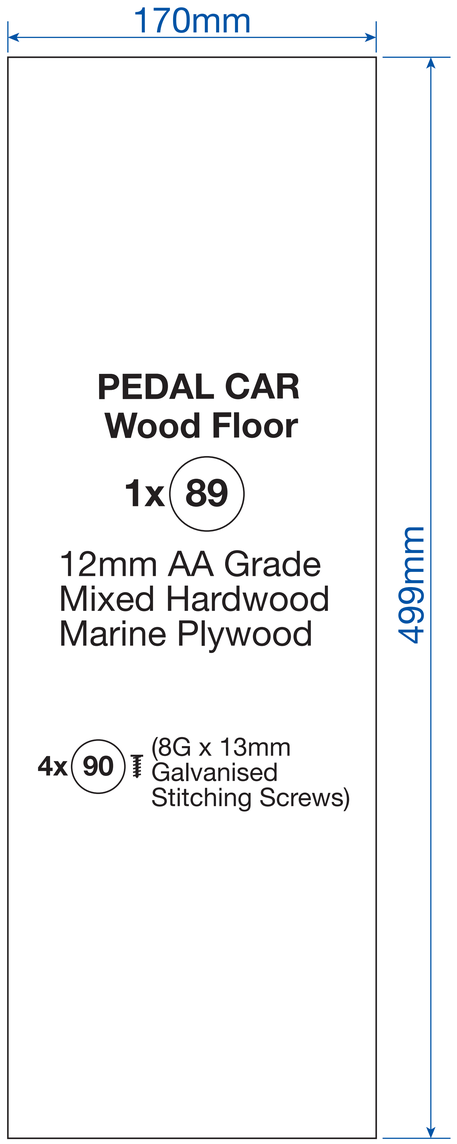


**PEDAL CAR**
**Wood Floor**

1x 89

12mm AA Grade Mixed Hardwood Marine Plywood

4x 90 (8G x 13mm Galvanised Stitching Screws)

# RUNNING BOARDS & MUD GUARD ASSEMBLY

| PLAN 4 | DRAWING: 12 |
|---|---|
| SCALE: | TOLERANCE ± 2mm |

Flatbed Felix
PEDAL CAR BUILD

HARE & FORBES MACHINERYHOUSE
www.machineryhouse.com.au

Copyright © 2020 Hare and Forbes Machineryhouse
All rights reserved.

**MATERIALS LIST:**
Rear Mud Guard: 2 x 780 x 100mm (1mm thick sheet mild steel)

Rear Mud Guard Brackets: 2 x 305 x 40mm (1.6mm thick sheet mild steel)

Front Mud Guard: 2 x 630 x 100mm (1mm thick sheet mild steel)

Running Boards: 2 x 650 x 205mm (1mm thick sheet mild steel)

Screws : 4 x (8G x 12mm Wafer Head Philps Drive Metal Screws)
4 x (8G x 25mm Stitching Button Head Screws)

Nuts and Bolts: 18 x (M4 x10mm SS Button Socket Head Scews)
18 x (M4 SS Nylock Nuts)
18 x (M4 SS Washers)

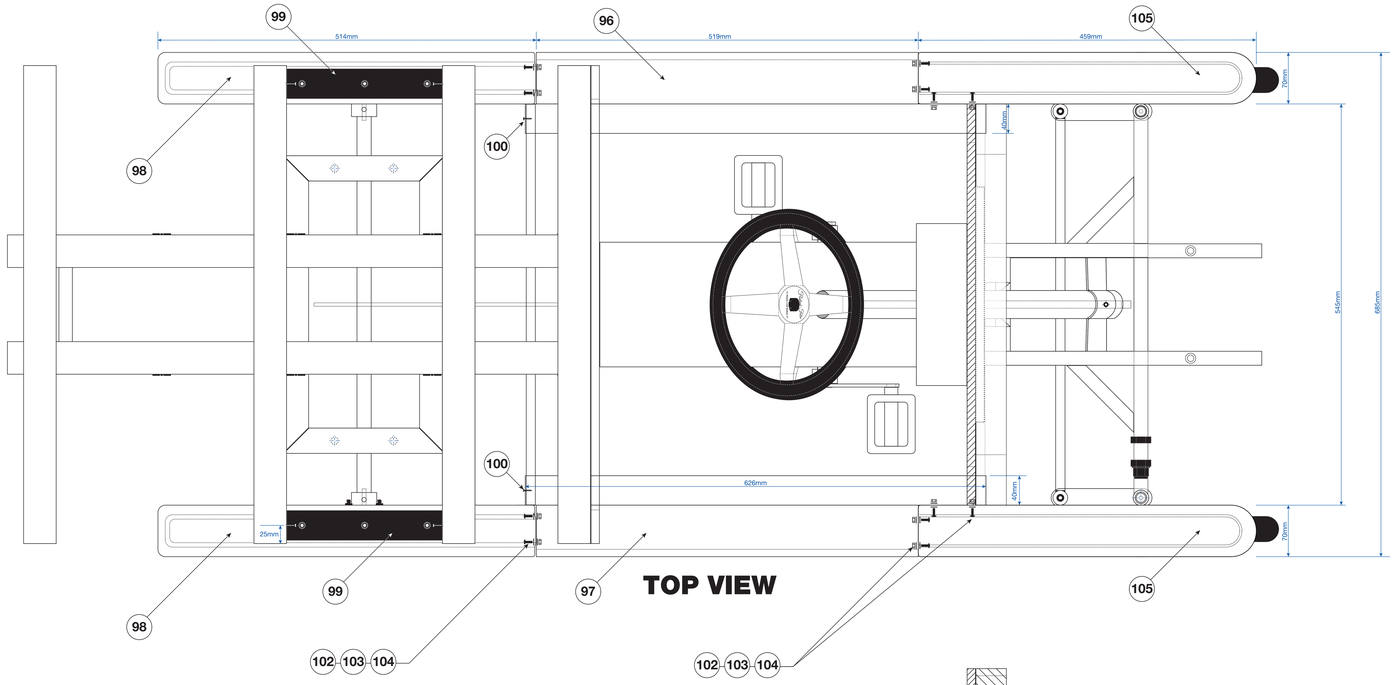


TOP VIEW

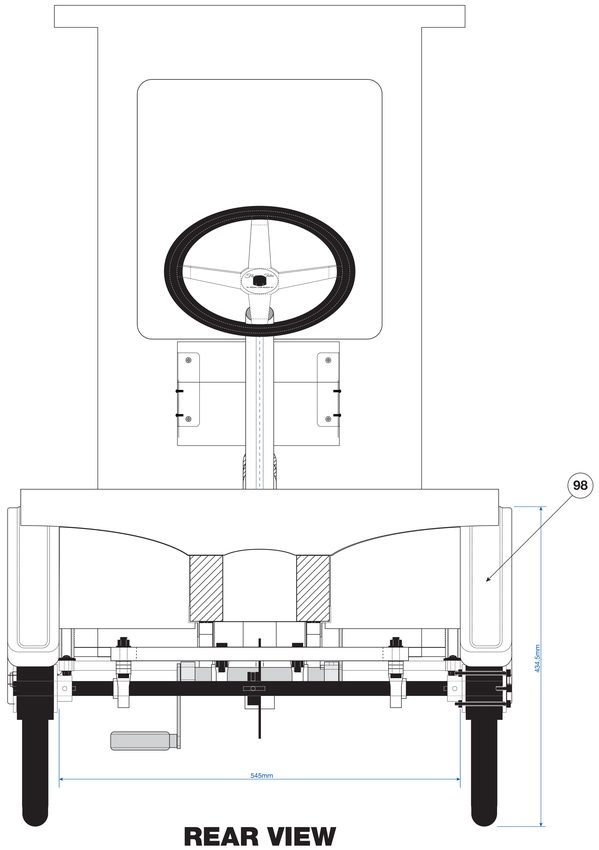


REAR VIEW

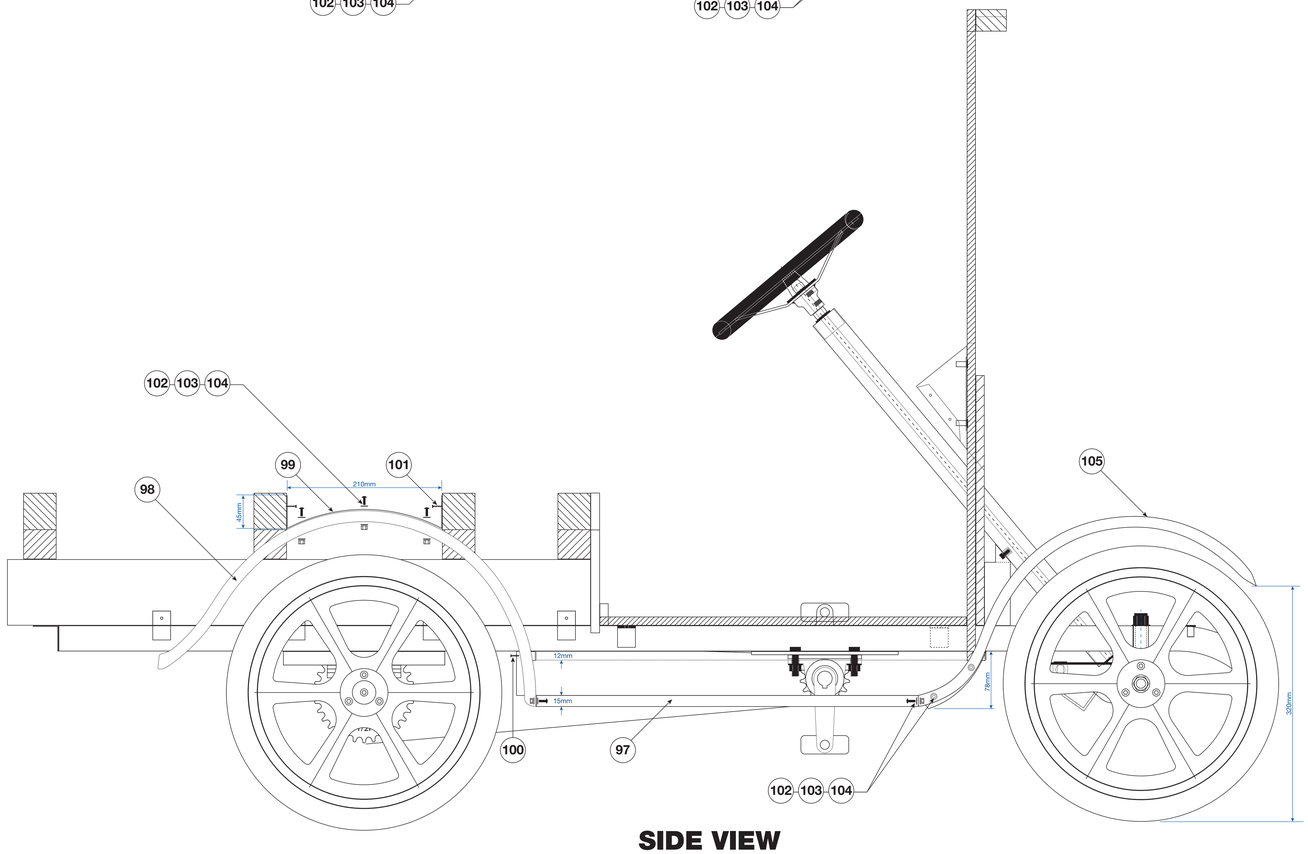


SIDE VIEW

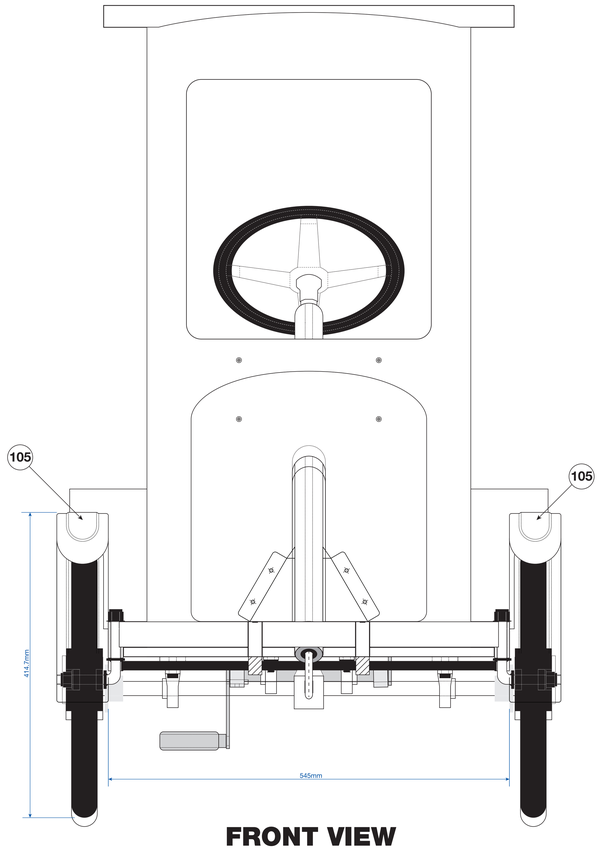


FRONT VIEW

## PARTS LIST

1x (96)
**Left Running Board**
1mm thick steel sheet

1x (97)
**Right Running Board**
1mm thick steel sheet

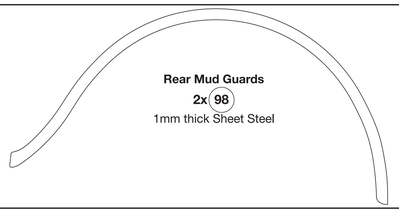

**Rear Mud Guards**
2x (98)
1mm thick Sheet Steel

**Rear Mud Guard Brackets**
2x (99)
1.6mm thick steel sheet

4x (100) 8G x 12mm Wafer Head Philips Drive Metal Screws

4x (101) 8G x 25mm Stitching Button Head Screws

18x (102) M4 x10mm SS Button Socket Head Scews

18x (103) M4 SS Washers

18x (104) M4 SS Nylock Nuts

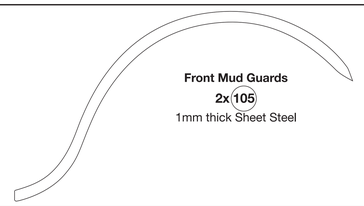

**Front Mud Guards**
2x (105)
1mm thick Sheet Steel

# TEMPLATES
## Left Running Board

| TEMPLATE | DRAWING: 13 |
|---|---|
| SCALE: 1:1 | TOLERANCE ± 2mm |

MATERIALS LIST:
650 x 205mm (1mm Thick Sheet Mild Steel)

Flatbed Felix — PEDAL CAR BUILD

HARE & FORBES MACHINERYHOUSE
www.machineryhouse.com.au

Copyright © 2020 Hare and Forbes Machineryhouse
All rights reserved.

0 10 20 30 40 50 60 70 80 90 100 Scale (mm)

## TOP VIEW

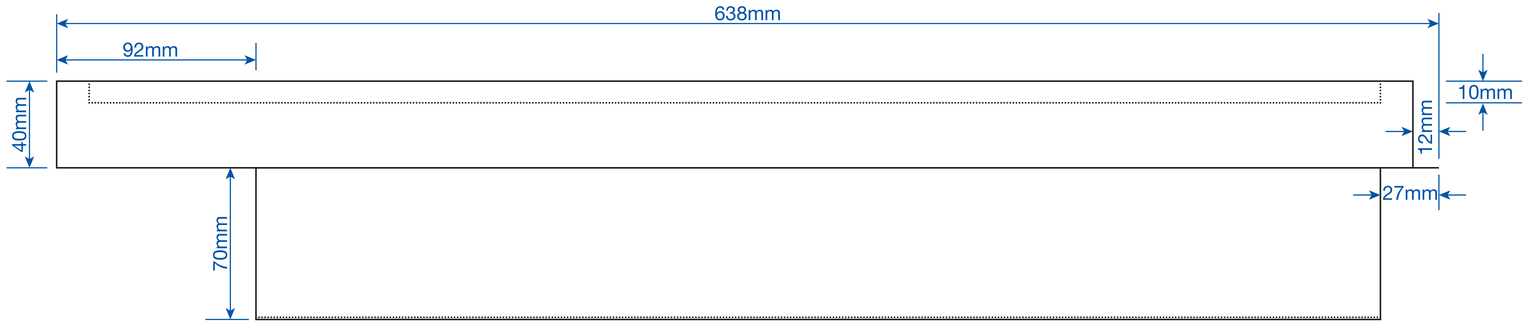


## TEMPLATE

**1x 96**

**Left Running Board**
1mm Thick Sheet Steel

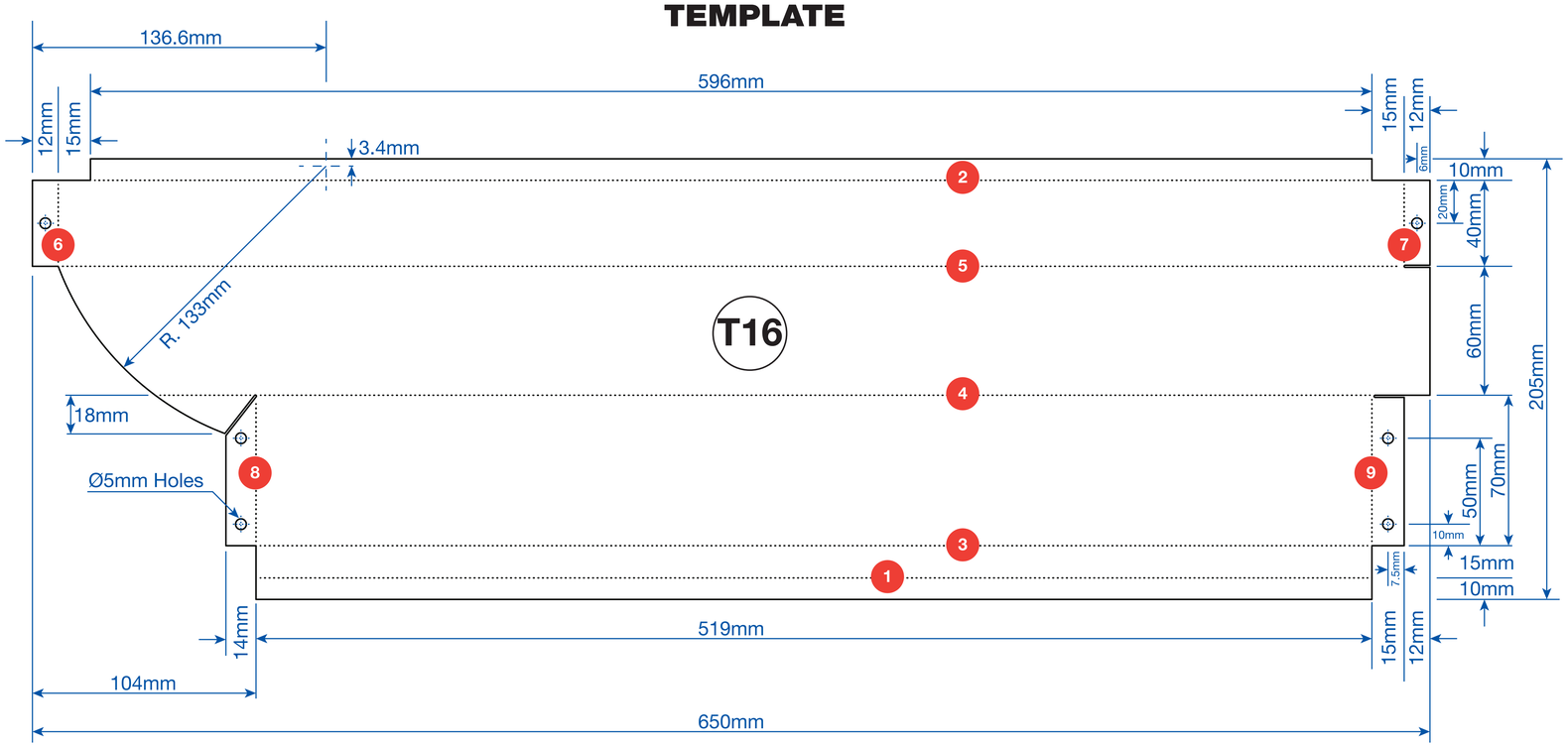


## FORMING INSTRUCTIONS

NOTE: Mark fold lines 1-3, 5-7 on back side

1. Use a Folder & Hammer - Turn over & Fold + Safety Fold
2. Use a Folder & Hammer - Turn over & Fold + Safety Fold
3. Use a Folder - Turn over & Fold
4. Use a Folder - Front Fold
5. Use a Folder - Turn over & Fold
6. Use a Folder - Turn over & Fold
7. Use a Folder - Turn over & Fold
8. Use Vice Grips & Hammer
9. Use Vice Grips & Hammer

See Video for more details.

## FRONT VIEW

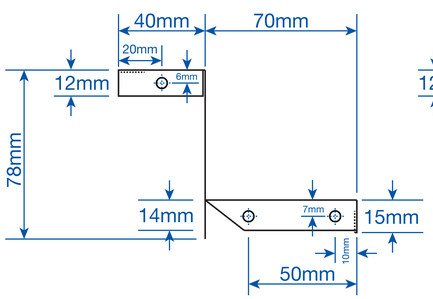


## SIDE VIEW

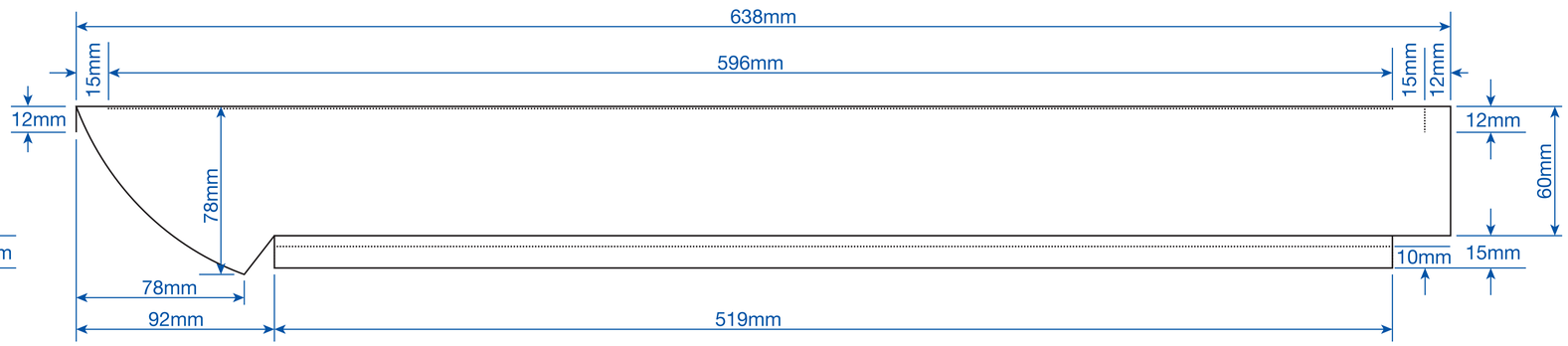


## REAR VIEW

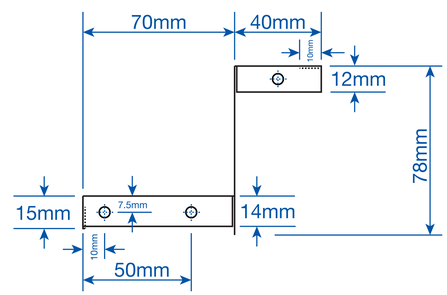

# TEMPLATES
## Right Running Board

| TEMPLATE | DRAWING: 14 |
|---|---|
| SCALE: 1:1 | TOLERANCE ± 2mm |

MATERIALS LIST:
650 x 205mm (1mm Thick Sheet Mild Steel)

Flatbed Felix — PEDAL CAR BUILD

HARE & FORBES MACHINERYHOUSE
www.machineryhouse.com.au

Copyright © 2020 Hare and Forbes Machineryhouse
All rights reserved.

Scale (mm): 0 10 20 30 40 50 60 70 80 90 100

## TOP VIEW

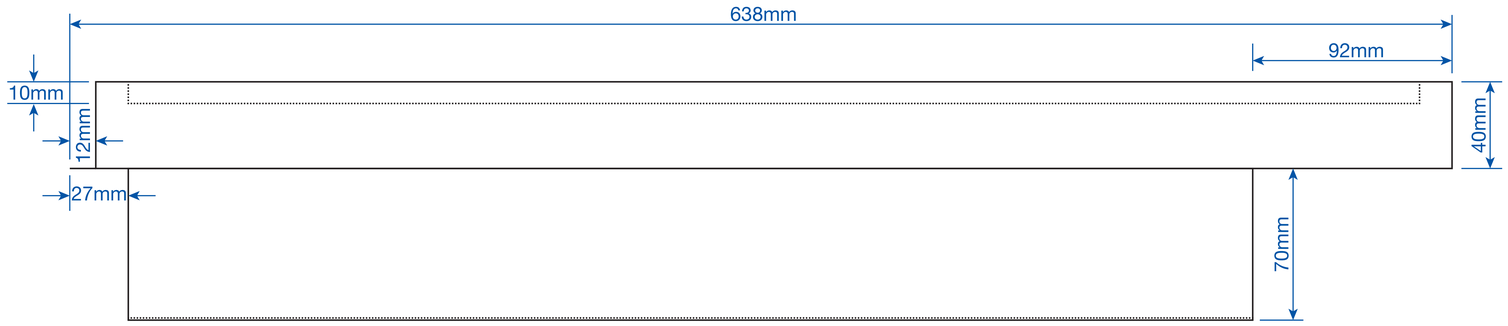


## TEMPLATE

1x 97

**Right Running Board**
1mm Thick Sheet Steel

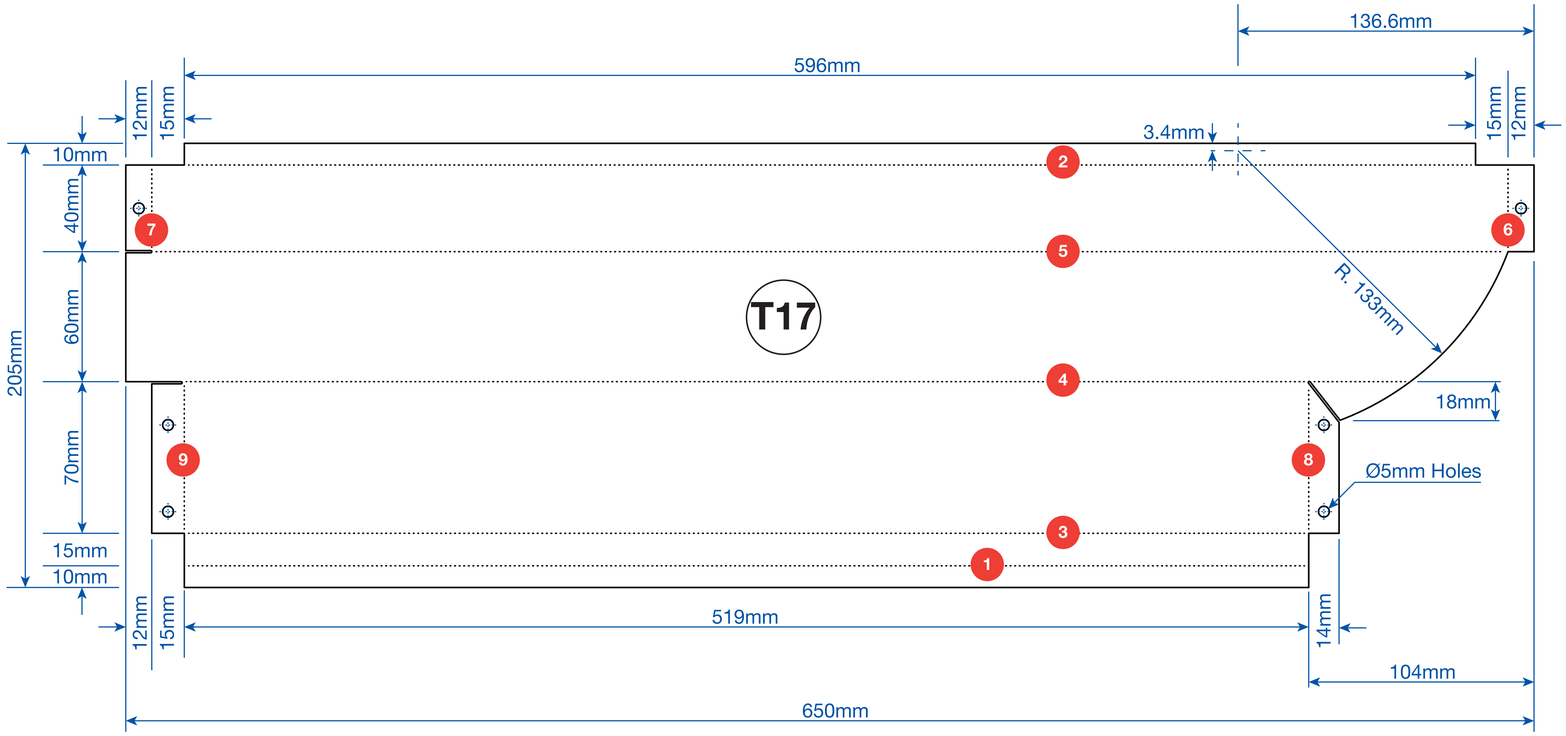


## FORMING INSTRUCTIONS

NOTE: Mark fold lines 1-3, 5-7 on back side

1. Use a Folder & Hammer - Turn over & Fold + Safety Fold
2. Use a Folder & Hammer - Turn over & Fold + Safety Fold
3. Use a Folder - Turn over & Fold
4. Use a Folder - Front Fold
5. Use a Folder - Turn over & Fold
6. Use a Folder - Turn over & Fold
7. Use a Folder - Turn over & Fold
8. Use Vice Grips & Hammer
9. Use Vice Grips & Hammer

See Video for more details.

## REAR VIEW

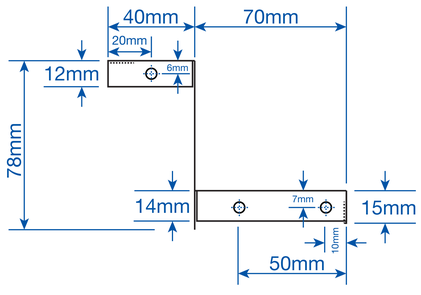


## SIDE VIEW

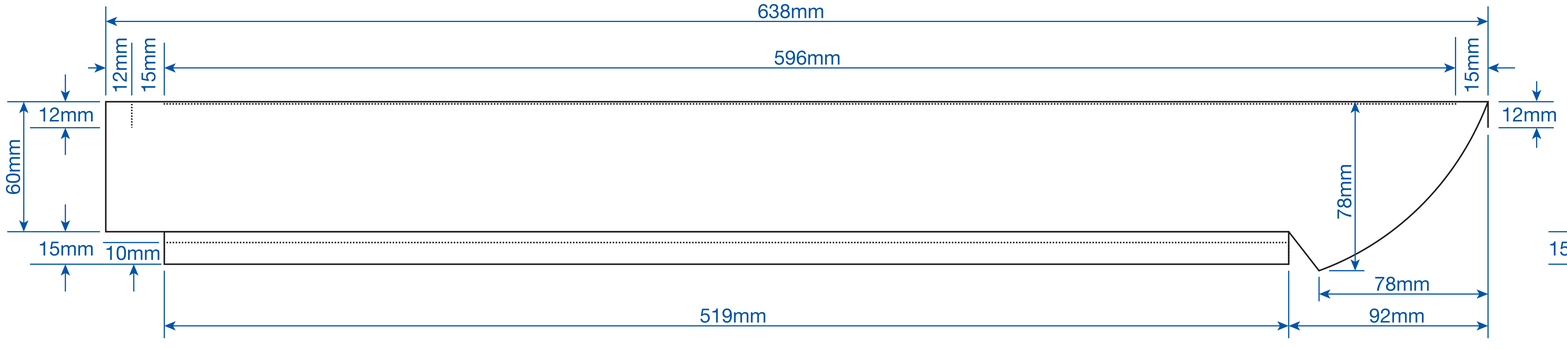


## FRONT VIEW

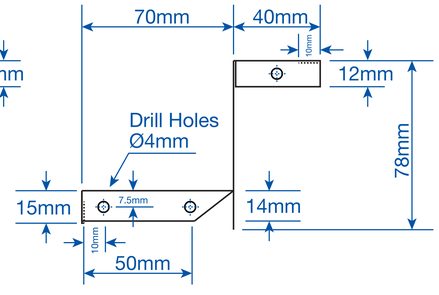

# TEMPLATES
## Rear Mud Guards

| TEMPLATE | DRAWING: 15 |
|---|---|
| SCALE: 1:1 | TOLERANCE ± 2mm |

Flatbed Felix — PEDAL CAR BUILD

HARE & FORBES MACHINERYHOUSE

www.machineryhouse.com.au

Copyright © 2020 Hare and Forbes Machineryhouse
All rights reserved.

**MATERIALS LIST:**
Mud Guard - 780 x 200mm (1mm Thick Mild Sheet Steel)
Bracket - 305 x 80mm (1.6mm Thick Mild Sheet Steel)

Screws : 4 x (8G x 25mm Stitching Button Head Screws)

Nuts and Bolts: 10 x (M4 x10mm SS Button Socket Head Scews)
10 x (M4 SS Nylock Nuts)
10 x (M4 SS Washers)

Rear Guard Forming Buck: 511 x 333mm x 4 (17mm thick Formply)
20 x 10G x 50mm Chipboard Screws
3mm x 40mm x 747mm long Steel Flat Bar
16 x 8G x 25mm Chipboard Screws

## Brackets
**2x (99)**
1.6mm Thick Sheet Steel

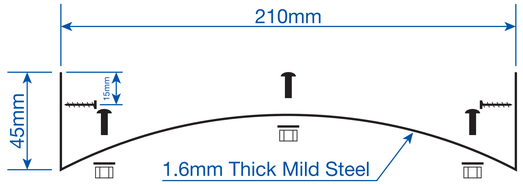


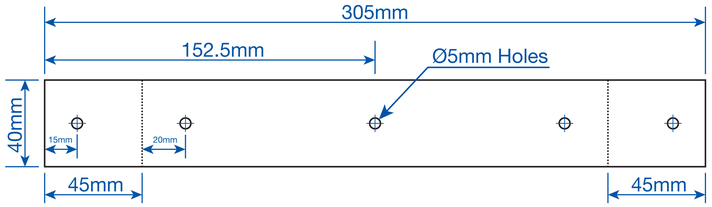


4x (100) 8G x 25mm Stitching Button Head Screws

10x (102) M4 x10mm SS Button Socket Head Scews

10x (103) M4 SS Washers

10x (104) M4 SS Nylock Nut

## BRACKET INSTRUCTIONS
1 Use a sheetmetal roller or hand form over a forming dolly to create the arc
2 Use a vice brake bender or folder to bend up the edges

Scale (mm): 0 10 20 30 40 50 60 70 80 90 100

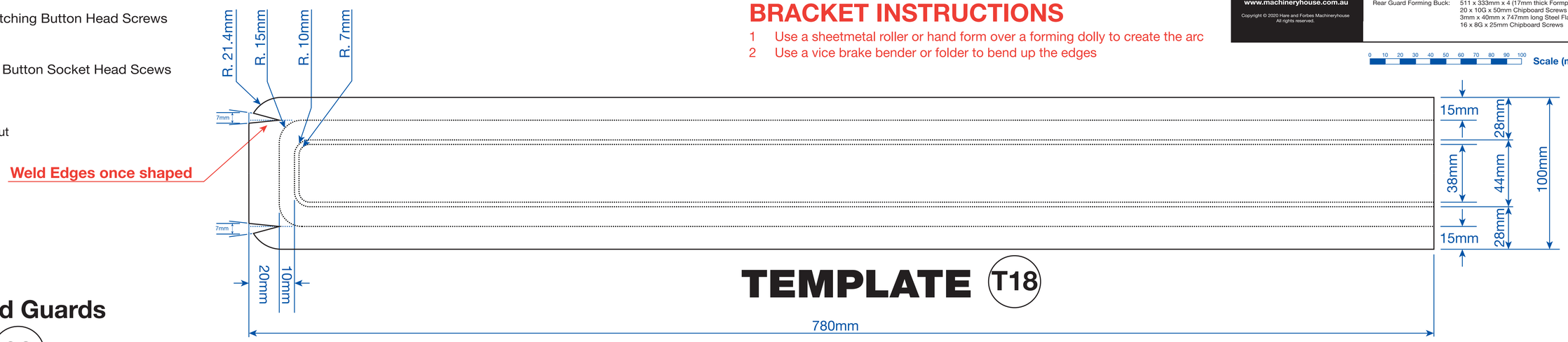


# TEMPLATE (T18)

## Rear Mud Guards
**2x (98)**
1mm Thick Sheet Steel

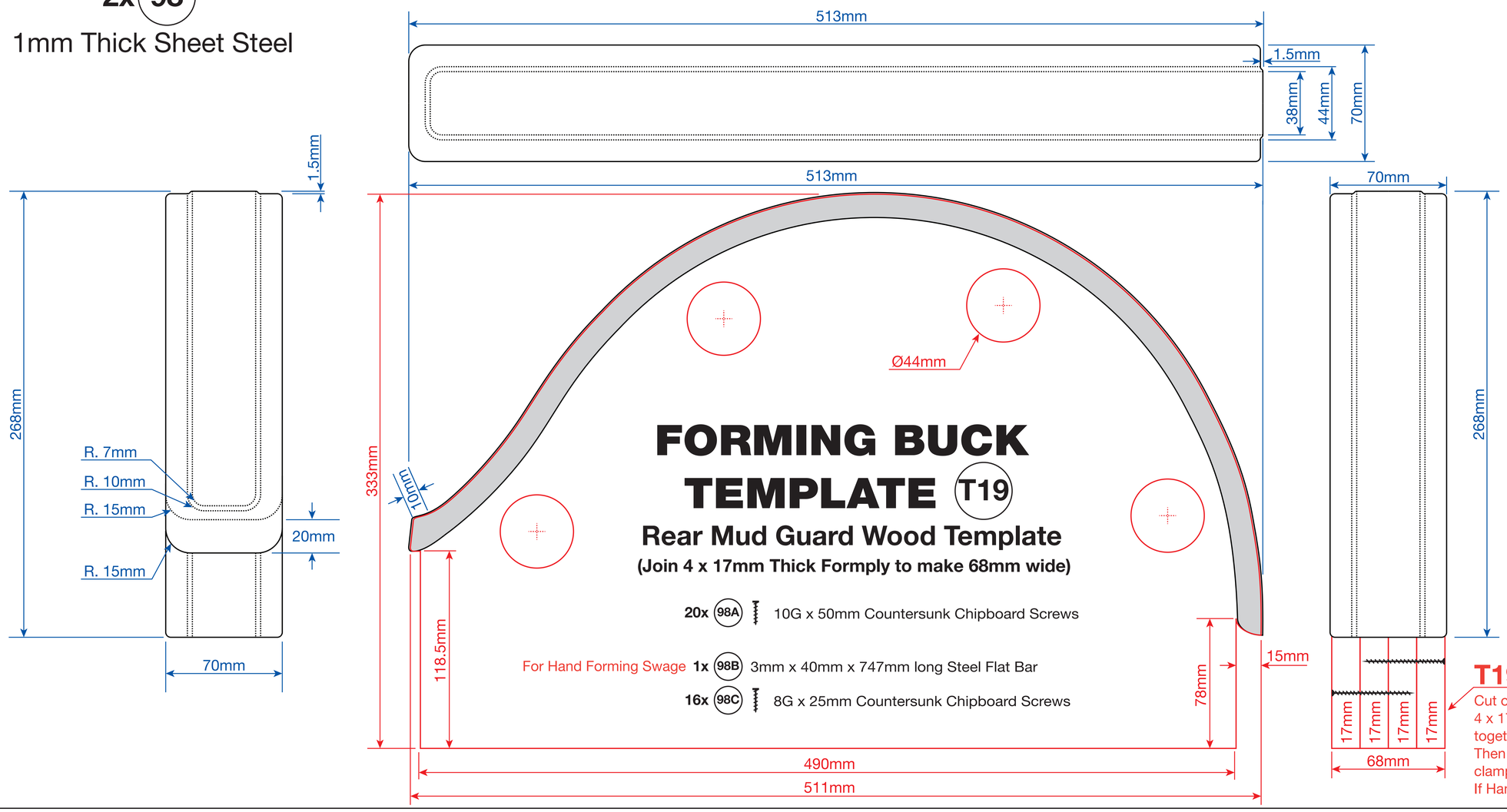


# FORMING BUCK TEMPLATE (T19)
## Rear Mud Guard Wood Template
**(Join 4 x 17mm Thick Formply to make 68mm wide)**

20x (98A) 10G x 50mm Countersunk Chipboard Screws

For Hand Forming Swage 1x (98B) 3mm x 40mm x 747mm long Steel Flat Bar

16x (98C) 8G x 25mm Countersunk Chipboard Screws

## HAND FORMING METHOD
**using T19, 98B & 98C**
2 Hand form Rear Guard edges over buck
3 Attach Flat bar 105B & 105C to Buck T21
4 Hand form swage over flat bar
5 Use Hand Tools to fold and form the tail end
6 Weld and finish the tail end

## MACHINERY METHOD
1 Use a 1" wide English Wheeling Machine to form a covex crown using a 5" lower radius die
2 Use a Folder to fold the side edges
3 Use a Bead Roller to create the swage using a 1/8" step die
4 Use a Shrinker/Stretcher on the side edges to from the radius
5 Repeat Step 1 - using a 2" lower radius die
6 Use Hand Tools to fold and form the tail end
7 Weld and finish the tail end

## T19 INSTRUCTIONS
Cut out the T19 Template and trace onto 4 x 17mm Formply boards. Cut out and join together 4 pieces with 50mm long 10G wood screws. Then finally holesaw out 4 x Ø44mm holes for clamping points for the mud guards.
If Hand Forming Swage - screw on Flat Bar. ref part 98B & 98C

# TEMPLATES
## Front Mud Guards

| TEMPLATE | DRAWING: 16 |
|---|---|
| SCALE: 1:1 | TOLERANCE ± 2mm |

Flatbed Felix — PEDAL CAR BUILD

HARE & FORBES MACHINERYHOUSE

www.machineryhouse.com.au

Copyright © 2020 Hare and Forbes Machineryhouse
All rights reserved.

**MATERIALS LIST:**

Front Mud Guards: 630 x 200mm (1mm Thick Mild Sheet Steel)
Hand Form Nose 120 x 62mm (1mm Thick Mild Sheet Steel)

Nuts and Bolts: 8 x (M4 x10mm SS Button Socket Head Scews)
8 x (M4 SS Washers)
8 x (M4 SS Nylock Nuts)

Front Guard Forming Buck: 468 x 414mm x 4 (17mm thick Formply)
20 x 10G x 50mm Chipboard Screws
3mm x 40mm x 567mm long Steel Flat Bar
16 x 8G x 25mm Chipboard Screws

Scale (mm): 0 10 20 30 40 50 60 70 80 90 100

# TEMPLATE T20

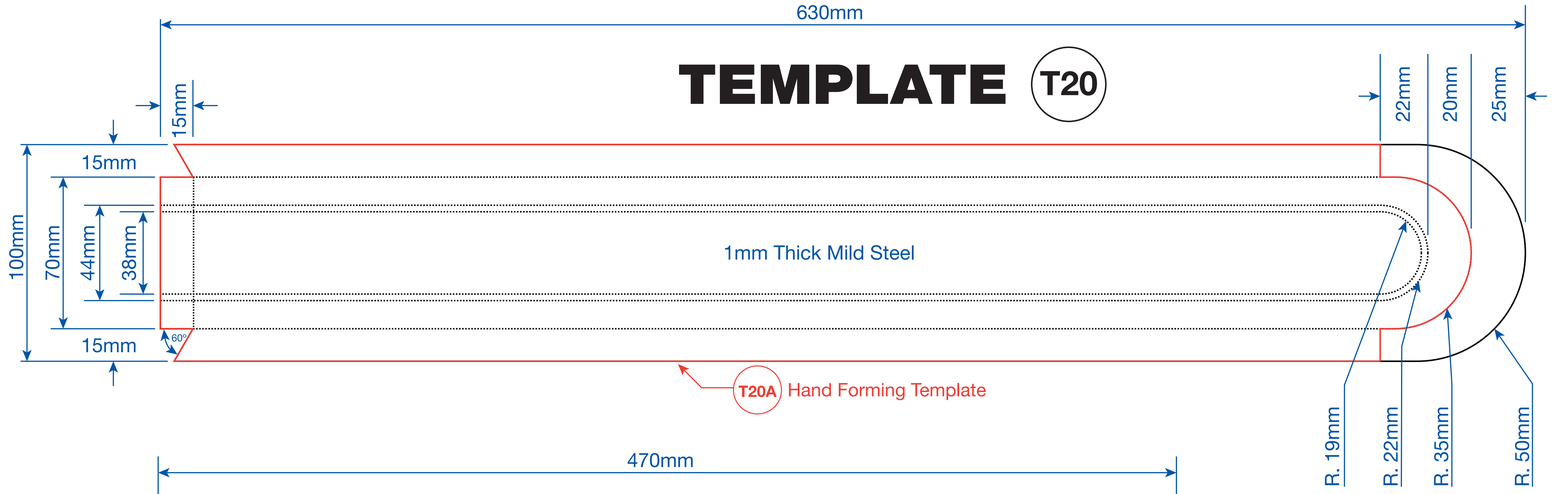


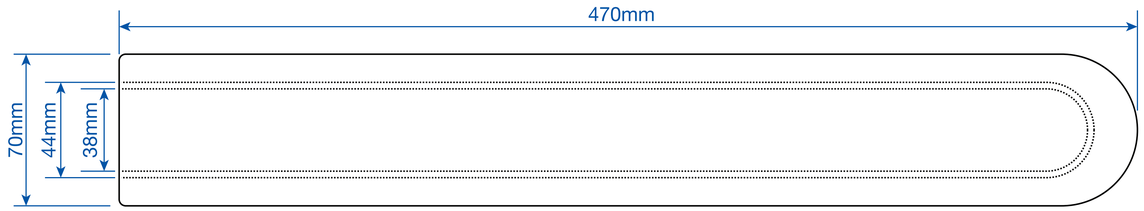


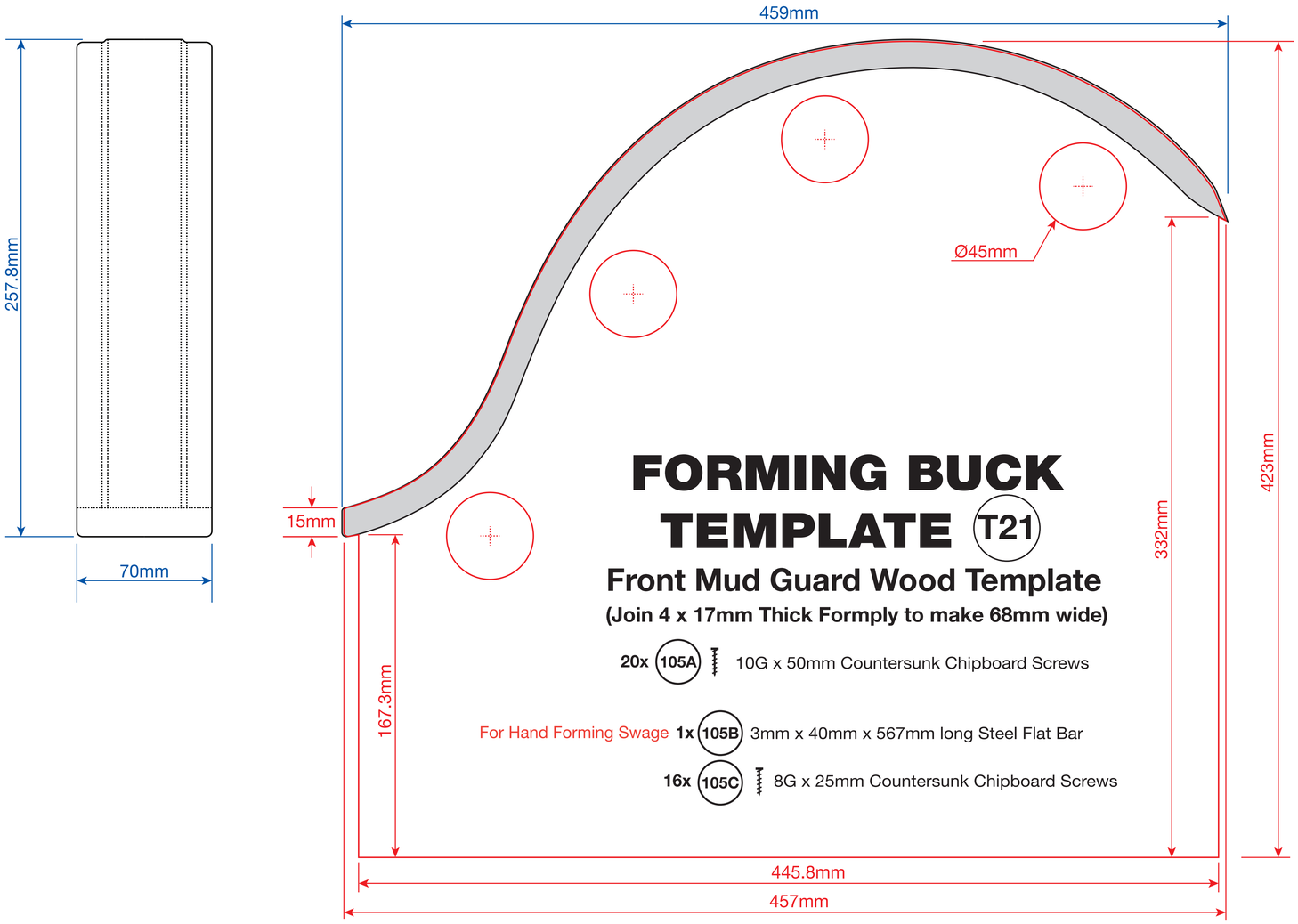


# FORMING BUCK TEMPLATE T21

## Front Mud Guard Wood Template

**(Join 4 x 17mm Thick Formply to make 68mm wide)**

**20x** (105A) 10G x 50mm Countersunk Chipboard Screws

For Hand Forming Swage **1x** (105B) 3mm x 40mm x 567mm long Steel Flat Bar

**16x** (105C) 8G x 25mm Countersunk Chipboard Screws

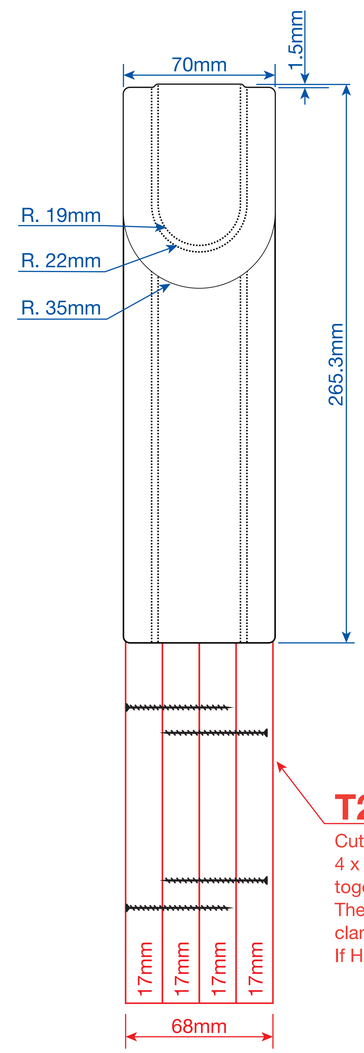


# HAND FORMING METHOD

**using T20A, T20B, T21, 105B & 105C**

1. Cut out Front Guard and Nose piece using T20A & T20B
2. Hand form Front Guard edges over buck
3. Attach Flat bar 105B & 105C to Buck T21
4. Hand form swage over flat bar
5. Hand form Nose Piece T20B using hammer & dolly
6. Weld Nose Piece to Front Guard and finish off

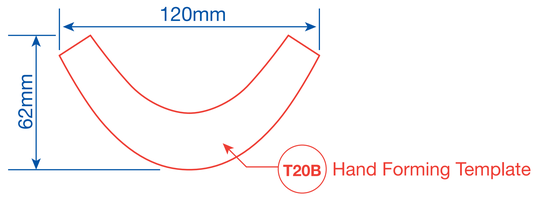


# MACHINERY METHOD

1. Use a 1" wide English Wheeling Machine to form a covex crown using a 5" lower radius die.
2. Use a Folder to fold the side edges.
3. Use a Bead Roller to create the swage using a 1/8" step die.
4. Use Tin Snips cut tail edges then fold up tail using Seaming Pliers
5. Use a Shrinker/Stretcher on the side edges to from the radius. Form Nose using Shrinker, Hammer & Dolly
6. Weld and finish the tail end.

## Front Mud Guards

**2x (105)**

1mm Thick Sheet Steel

**8x** (102) M4 x10mm SS Button Socket Head Scews

**8x** (103) M4 SS Washers

**8x** (104) M4 SS Nylock Nuts

# T21 INSTRUCTIONS

Cut out the T21 Template and trace onto 4 x 17mm Formply boards. Cut out and join together 4 pieces with 50mm long 10G wood screws. Then finally holesaw out 4 x Ø44mm holes for clamping points for the mud guards.
If Hand Forming Swage - screw on Flat Bar. ref part 105B, 105C

# BONNET ASSEMBLY

| PLAN 5 | DRAWING: 17 |
|---|---|
| SCALE: | TOLERANCE ± 2mm |

Flatbed Felix
PEDAL CAR BUILD

HARE & FORBES MACHINERYHOUSE

www.machineryhouse.com.au

Copyright © 2020 Hare and Forbes Machineryhouse
All rights reserved.

**MATERIALS LIST:**

Bonnet: 290 x 460mm (1mm Mild Sheet Steel)
Hinge: 300mm Piano Hinge
Magnetic Strip: 2 x 235mm (13mm wide Self-Adhesive Magnetic Strip)
Hinge Brakets: 16 x 40mm (1.6mm thick sheet steel) weld on Ø5mm x 16mm pipe
15 x 45mm (1.6mm thick sheet steel) weld on Ø5mm x 15mm pipe
2 x (M4 x 10mm Countersunk Socket Head Screws)
2 x (M4 SS Washers)
2 x (M4 SS Nylock Nuts)

Valance: 150 x 300mm (1mm Mild Sheet Steel)
2 x (M4 x 16mm SS Button Socket Head Screws)
2 x (M4 Washers)

Bonnet Side Panels: 650 x 600mm (1mm Mild Sheet Steel)
4 x (7G x 12mm Drywall Screws)
4 x (M6 x 16mm SS Button Socket Head Screws)

Wheel Arches: 300 x 900mm (1mm Mild Sheet Steel)
4 x (8G x 12mm Wafer Head Philips Drive Metal Screws)

Radiator: 35 x 780mm (1mm Mild Sheet Steel)
70 x 1000mm (1mm Mild Sheet Steel)
4 x (M6 x 1.0mm Nut Inserts)
2 x (M6 x 16mm SS Button Socket Head Screws)
Radiator Grill: 322 x 190mm (1.6mm Aluminium Perforated Pattern 218 - 3.2mm Round Holes. 4.8mm staggered pitch)

Light Support Bar: 585mm x (Ø12.7 x 1.2mm Round Commercial ERW Tube)
60mm x (3mm x 13mm Steel Flat Bar)
2 x (M6 x 16mm SS Button Socket Head Screws)
2 x (M6 SS Nylock Nuts)
2 x (M4 x 16mm SS Button Socket Head Screws)
2 x (M4 SS Washers)
2 x (M4 SS Nylock Nuts)

Head Lights: 2 x (3xLED Vintage Headlight with mounting Bracket)

Radiator Cap: 100mm x (Ø31.75mm Rod C385 Brass)
100mm x (Ø12.7mm Rod C385 Brass)
1 x (M5 x 40mm Stainless Steel Button Head Screw)

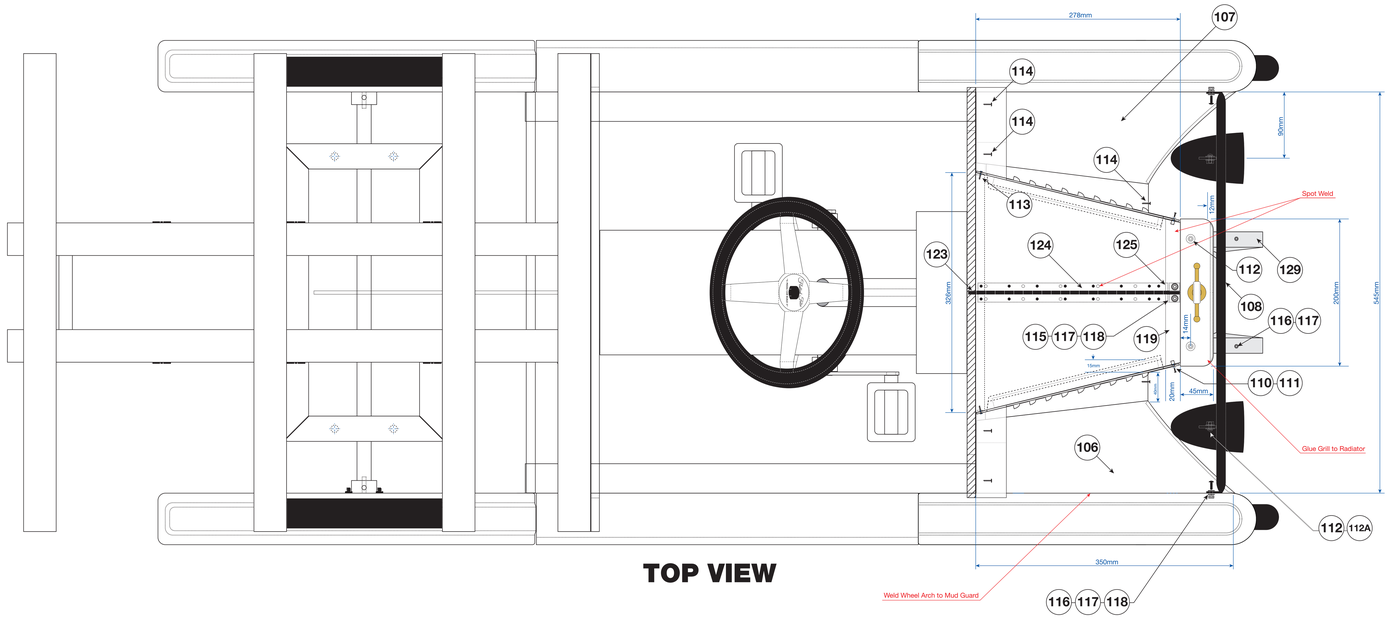


## TOP VIEW

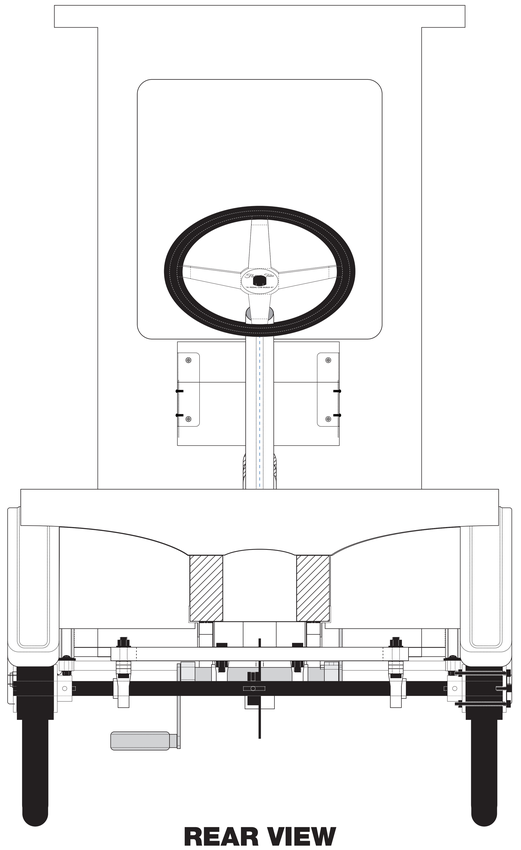

## REAR VIEW

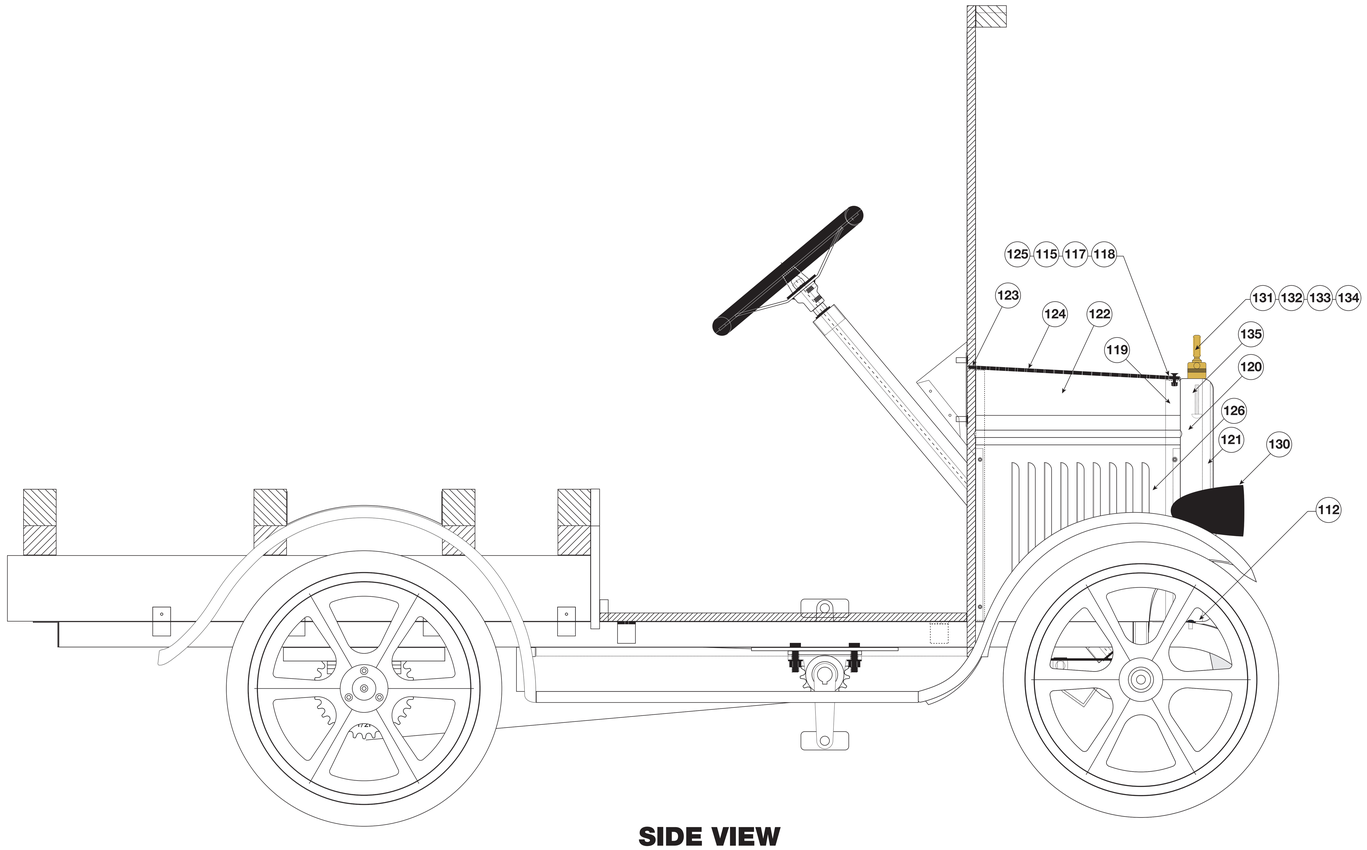


## SIDE VIEW

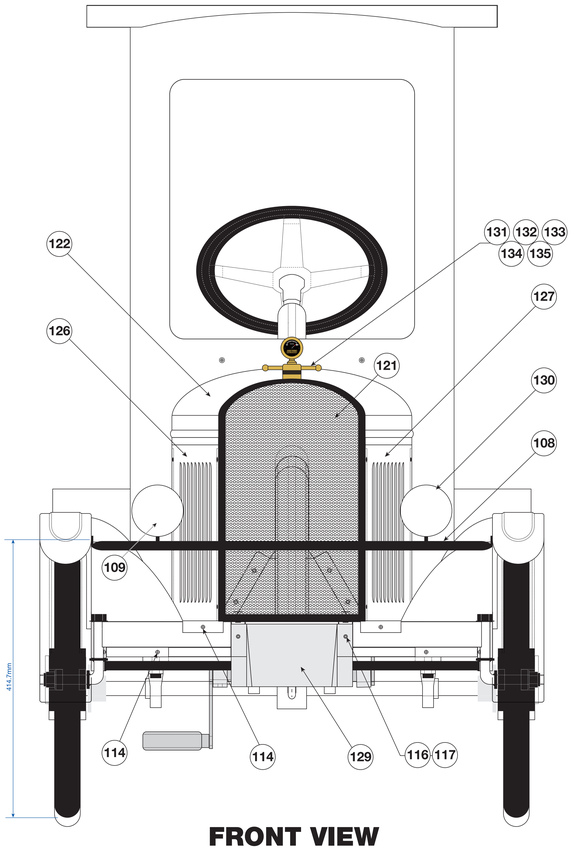


## FRONT VIEW

## PARTS LIST

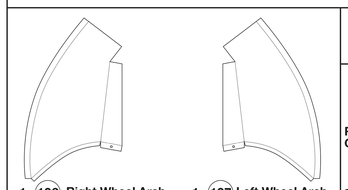

1x (106) Right Wheel Arch

1x (107) Left Wheel Arch

1x (108) Head Light - Support Bar
Ø12.7mm Tube x 1.2mm Wall

2x (109) 3mm thick steel plate **Head Light Brackets**

**Head Lights x 2**
2x (130)

**Radiator Temperature Gauge**
1x (131)
1x (132)
1x (133)
2x (134)
1x (135)

4x (110) M6 x 1.0mm Nut Inserts
4x (111) M6 x 16mm SS Button Socket Head Scews
4x (112) M6 x 16mm SS Button Socket Head Scews
2x (112A) M6 SS Nylock Nut
4x (113) 7G x 12mm Drywall Screws
4x (114) 8G x 12mm Wafer Head Philips Drive Metal Screws
2x (115) M4 x 10mm Countersunk Socket Head Scews
4x (116) M4 x 16mm SS Button Socket Head Scews
4x (117) M4 SS Washers
4x (118) M4 SS Nylock Nuts

**Radiator**
1x (119)
1x (120)
1x (121)
4x (110) M6 x 1.0mm Nut Inserts

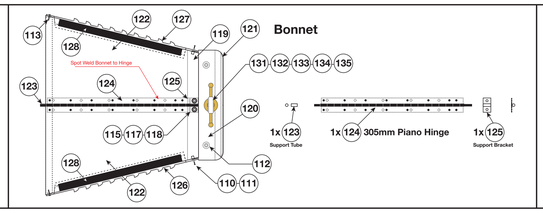


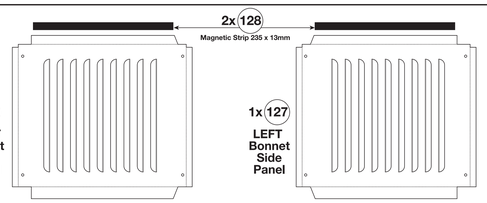


1x (129) Valance

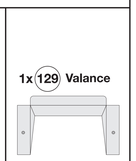

# BUCK ASSEMBLY

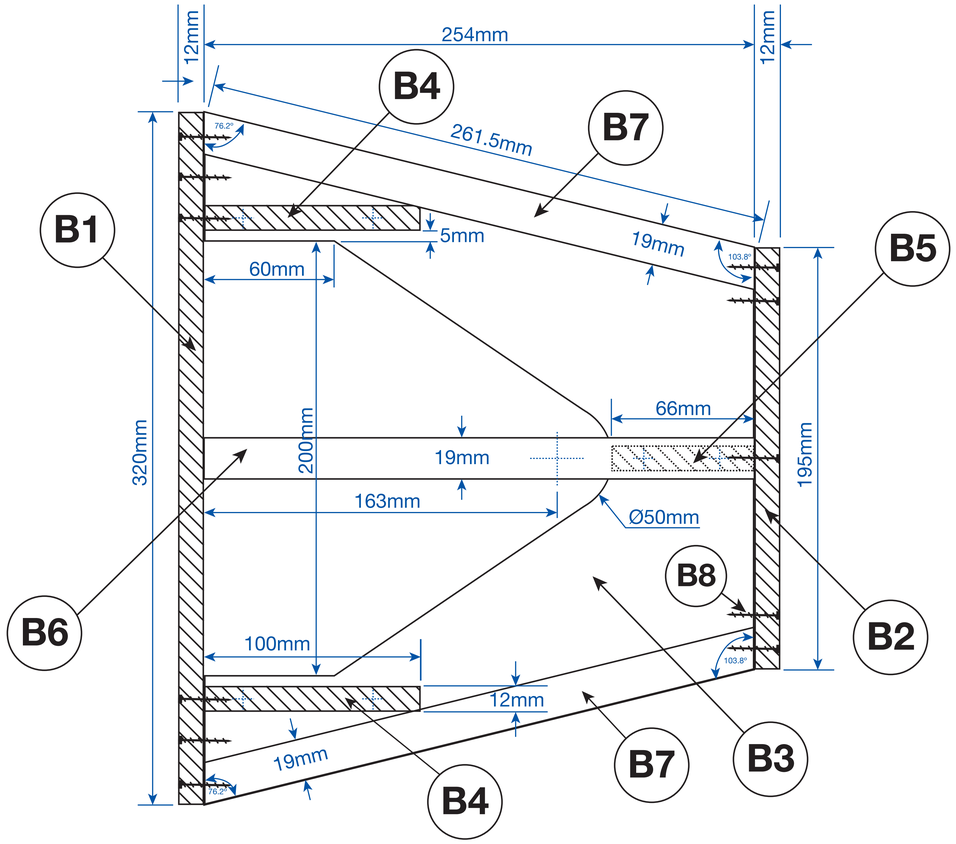


**Buck Assembly**

| TEMPLATE | DRAWING: 18 |
|---|---|
| SCALE: 1:1 | TOLERANCE ± 2mm |

**MATERIALS LIST:**
Buck Base & Walls: 320 x 1000mm (12mm AA Grade Mixed Hardwood Marine Plywood)
Triangle Supports: 166 x 125mm x (12mm AA Grade Mixed Hardwood Marine Plywood)
Side Supports: 800mm x (42 x 19mm Premium Grade Dressed Pine)
Wood Screws: 28 x (8G x 25mm Countersink Rib Head Chipboard Screws)

Flatbed Felix PEDAL CAR BUILD

HARE & FORBES MACHINERYHOUSE
www.machineryhouse.com.au

Copyright © 2020 Hare and Forbes Machineryhouse
All rights reserved.

0 10 20 30 40 50 60 70 80 90 100 Scale (mm)

28x B8 (8G x 25mm Chipboard Screws)

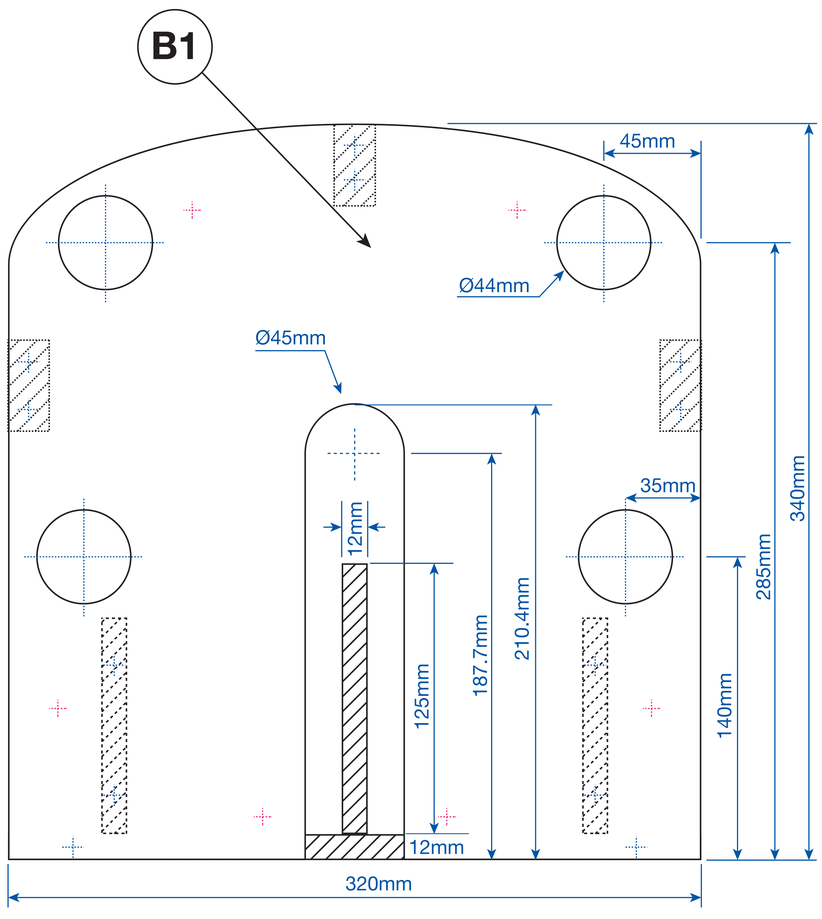


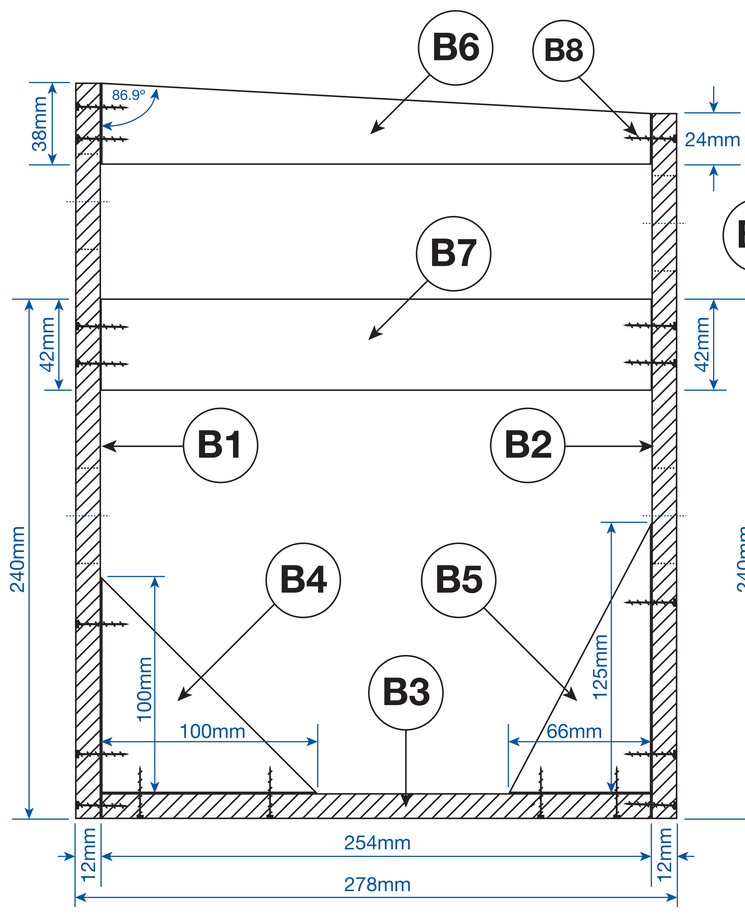


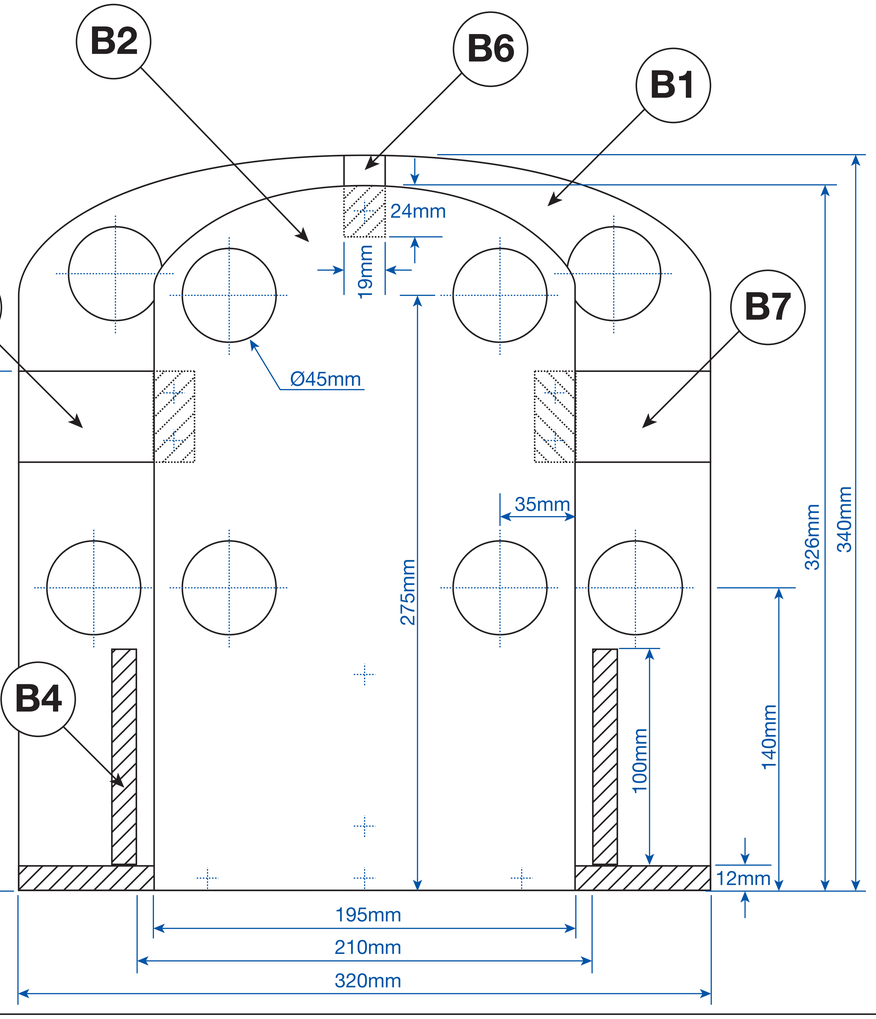

**TEMPLATES**
**Buck Parts**

| TEMPLATE | DRAWING: 19 |
|---|---|
| SCALE: 1:1 | TOLERANCE ± 2mm |

**MATERIALS LIST:**
Buck Base & Walls: 320 x 1000mm (12mm AA Grade Mixed Hardwood Marine Plywood)
Triangle Supports: 166 x 125mm x (12mm AA Grade Mixed Hardwood Marine Plywood)
Side Supports: 800mm x (42 x 19mm Premium Grade Dressed Pine)
Wood Screws: 28 x (8G x 25mm Countersink Rib Head Chipboard Screws)

Flatbed Felix — PEDAL CAR BUILD

HARE & FORBES MACHINERYHOUSE
www.machineryhouse.com.au

Copyright © 2020 Hare and Forbes Machineryhouse
All rights reserved.

0 10 20 30 40 50 60 70 80 90 100 Scale (mm)

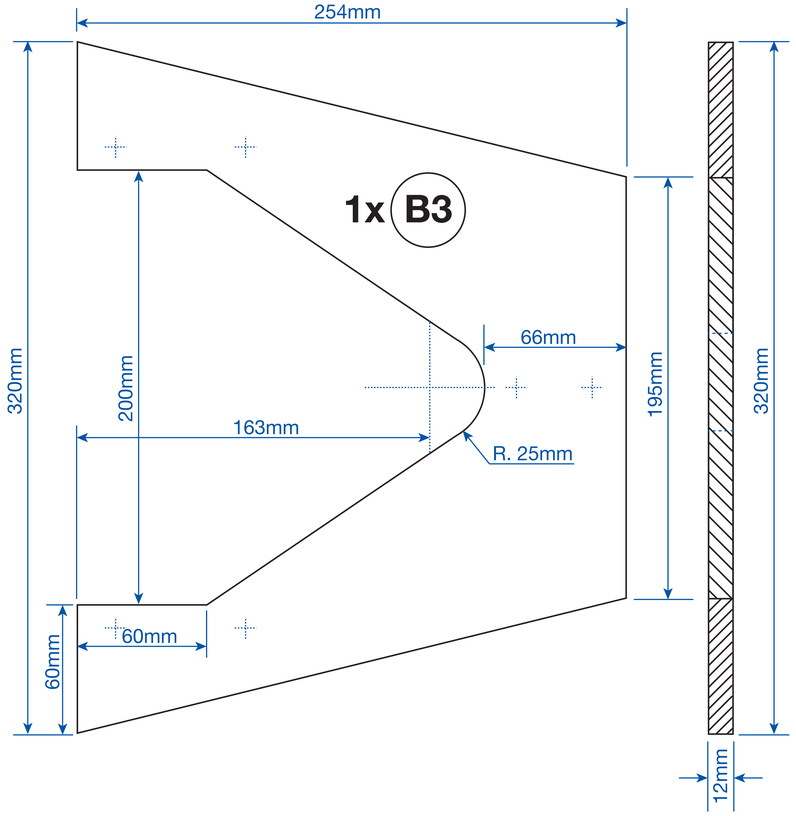


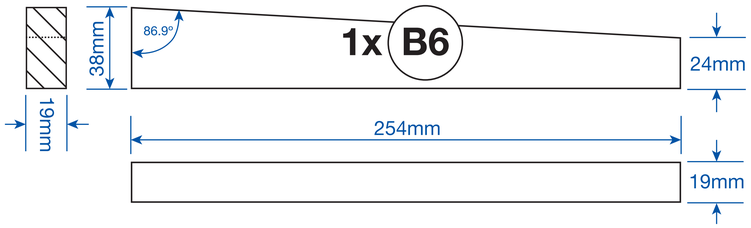


42 x 19mm Premium Grade Dressed Pine

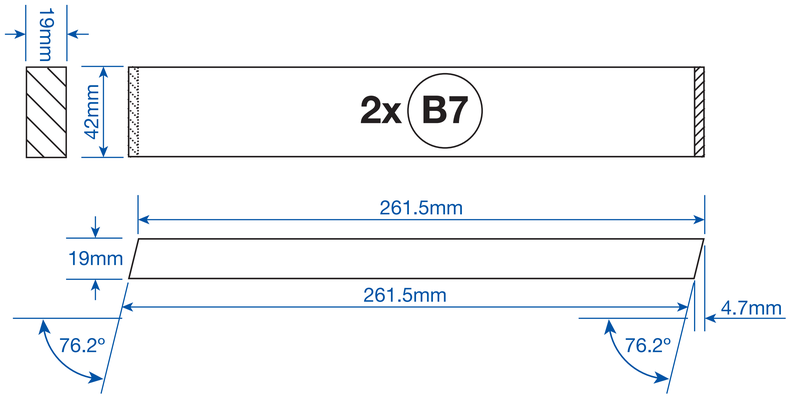


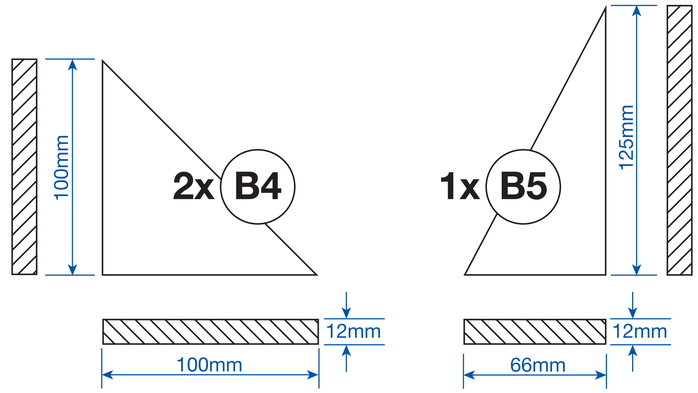


12mm AA Grade Mixed Hardwood Marine Plywood

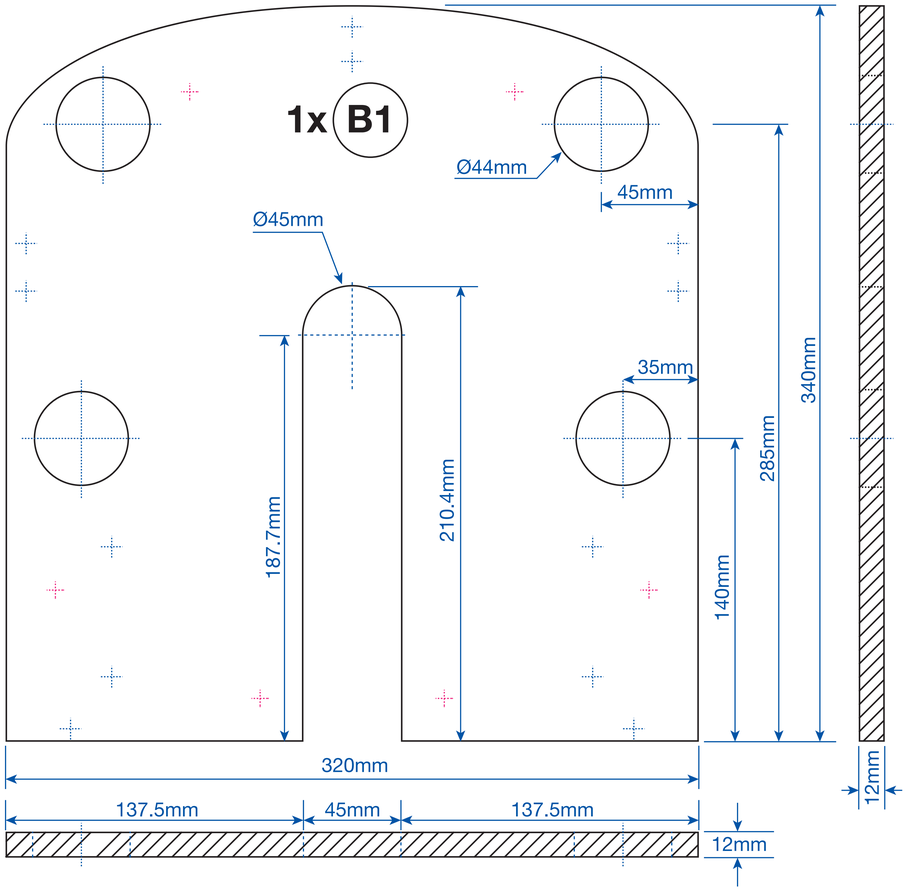


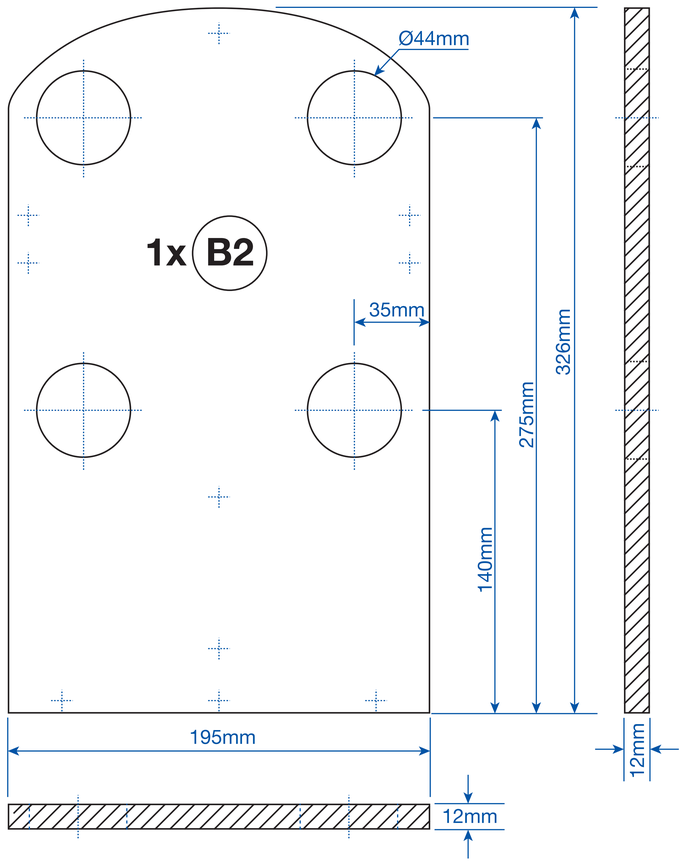


28x B8

(8G x 25mm Chipboard Screws)

# BUCK PARTS

# TEMPLATES
## Wheel Arches

| TEMPLATE | DRAWING: 20 |
|---|---|
| SCALE: 1:1 | TOLERANCE ± 2mm |

MATERIALS LIST:
Wheel Arches: 300 x 900mm (1mm Thick Mild Sheet Steel)

Flatbed Felix — PEDAL CAR BUILD

HARE & FORBES MACHINERYHOUSE
www.machineryhouse.com.au

Copyright © 2020 Hare and Forbes Machineryhouse
All rights reserved.

0 10 20 30 40 50 60 70 80 90 100 Scale (mm)

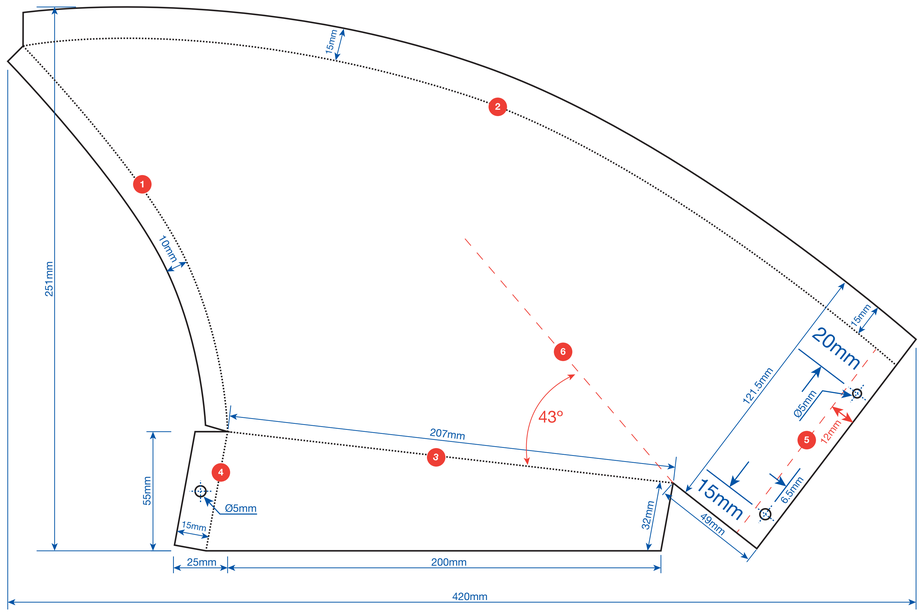


1x 106 Right Wheel Arch TEMPLATE T28

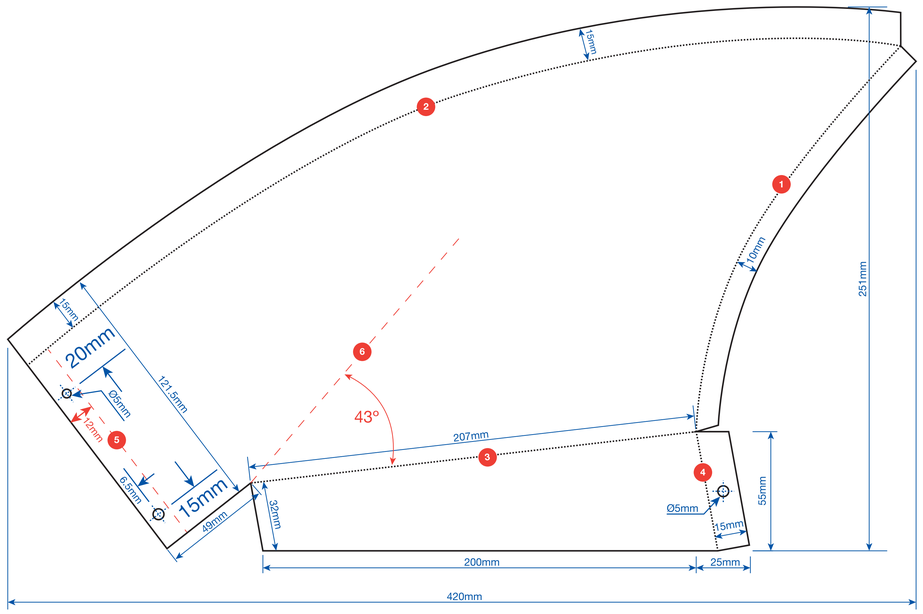


1x 107 Left Wheel Arch TEMPLATE T29

## HAND TOOL METHOD - Instructions

1. FOLD DOWN - Using combination pliers fold down to 90° then using 2 Shifters in conjunction, shrink to shape of WT2 profile.
2. FOLD UP - Using combination pliers fold flange up then stretch flange using a hammer and dolly, and caulk flat using hand tools to the shape of WAT.
3. FOLD UP - Use a Folder or Vice Brake Bender
4. FOLD DOWN - Use a Vice Brake Bender or Sheetmetal Wide Vice Grips
5. BEND DOWN - Draw a line 12mm up from base. Using seaming pliers - initiate a suttle fold to end up being 90° to mounting point.
6. BEND DOWN - Draw a 150mm long line 43° up from Fold 3. Using the smallest Tapered Dolly Ø25.4-Ø10mm manipulate a suttle fold.

## MACHINERY METHOD - Instructions

1. FOLD DOWN - Use a Bead Roller with Top Tipping Wheel & Blank Lower Die, roll to 90° then use a Shrinker to shape to WT2 profile.
2. FOLD UP - Use a Bead Roller with Top Tipping Wheel & Blank Lower Die
3. FOLD UP - Use a Folder or Vice Brake Bender
4. FOLD DOWN - Use a Vice Brake Bender or Sheetmetal Wide Vice Grips
5. BEND DOWN - Draw a line 12mm up from base. Using seaming pliers - initiate a suttle fold to end up being 90° to mounting point.
6. BEND DOWN - Draw a 150mm long line 43° up from Fold 3. Using the smallest Tapered Dolly Ø25.4-Ø10mm manipulate a suttle fold.

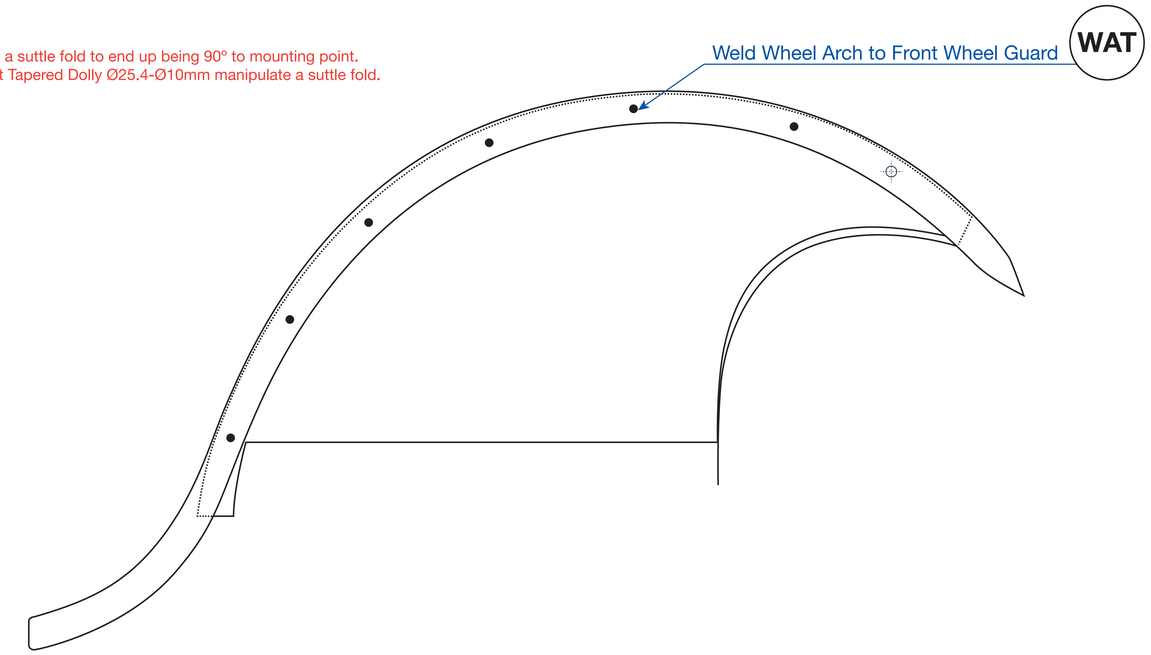


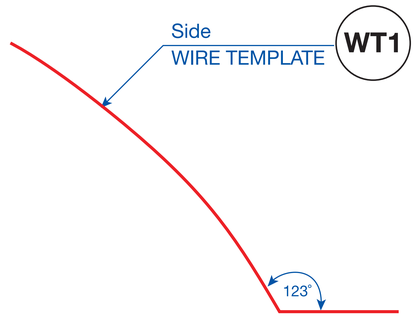


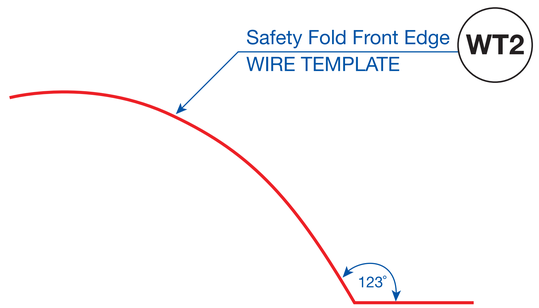

# Bonnet - Assembly

| TEMPLATE | DRAWING: 21 |
|---|---|
| SCALE: 1:1 | TOLERANCE ± 2mm |

Flatbed Felix — PEDAL CAR BUILD

HARE & FORBES MACHINERYHOUSE

www.machineryhouse.com.au

Copyright © 2020 Hare and Forbes Machineryhouse
All rights reserved.

**MATERIALS LIST:**
Bonnet Parts: 1mm Thick Mild Sheet Steel
Bonnet Piano Hinge: 1 x 305mm Piano Hinge
Radiator Grill: 190 x 320mm (1.6mm Aluminium Perforated Pattern 218 - 3.2mm round holes 4.8mm staggered pitch, 40% open area)
Magnetic Strip: 2 x 230mm (13mm wide Self-Adhesive Magnetic Strip)

Nuts Bolts and Scews:
- 4 x (M6 x 1.0mm Nut Inserts)
- 4 x (M6 x 16mm SS Button Socket Head Screws)
- 4 x (7G x 12mm Drywall Screws)
- 2 x (M4 x 10mm Countersunk Socket Head Screws)
- 4 x (M4 x 16mm SS Button Socket Head Screws)
- 4 x (M4 SS Washers)
- 4 x (M4 SS Nylock Nuts)

0 10 20 30 40 50 60 70 80 90 100 Scale (mm)

- 4x (110) M6 x 1.0mm Nut Inserts
- 4x (112) M6 x16mm SS Button Socket Head Scews
- 4x (113) 7G x 12mm Drywall Screws
- 2x (115) M4 x10mm Countersunk Socket Head Scews
- 4x (116) M4 x16mm SS Button Socket Head Scews
- 4x (117) M4 SS Washers
- 4x (118) M4 SS Nylock Nuts

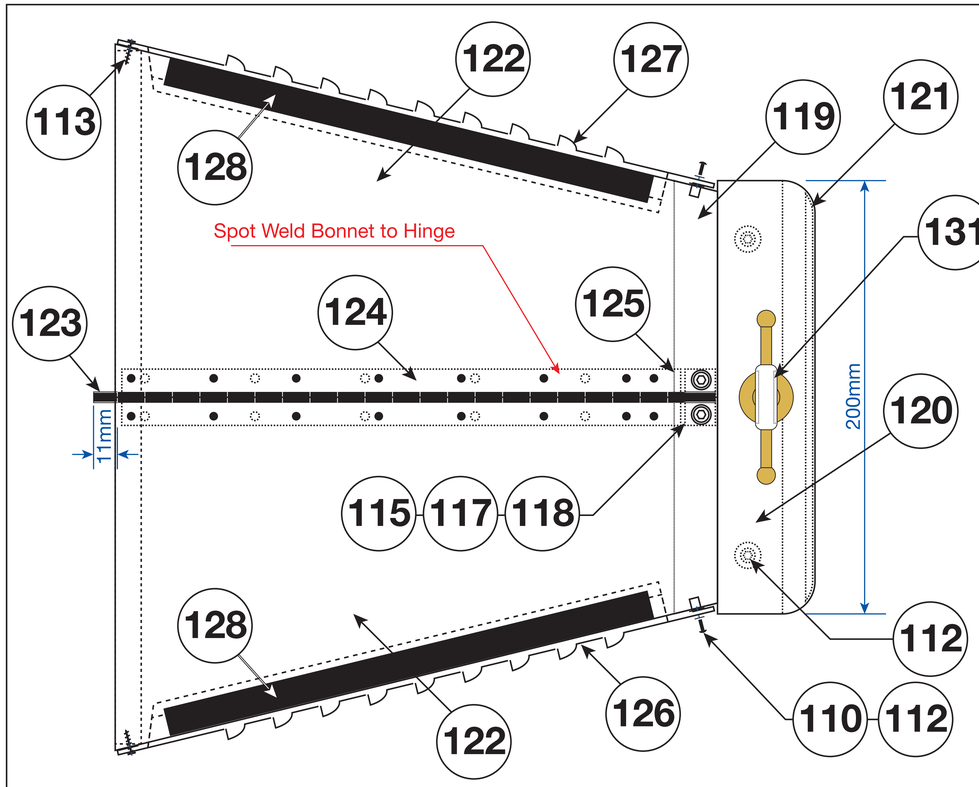


## 2x (128) Magnetic Strip 230 x 13mm

13mm wide Self-Adhesive Magnetic Strip

[redacted]

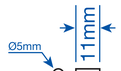


**1x (123) Support Tube**
Cut Piece from Hinge
Weld to Fix as Bracket

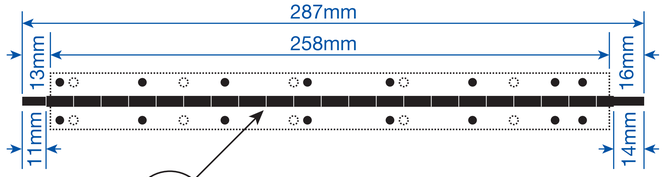


**1x (124) 305mm Piano Hinge**

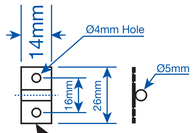


**1x (125) Support Bracket**
Cut Piece from Hinge
Weld to Fix as Bracket

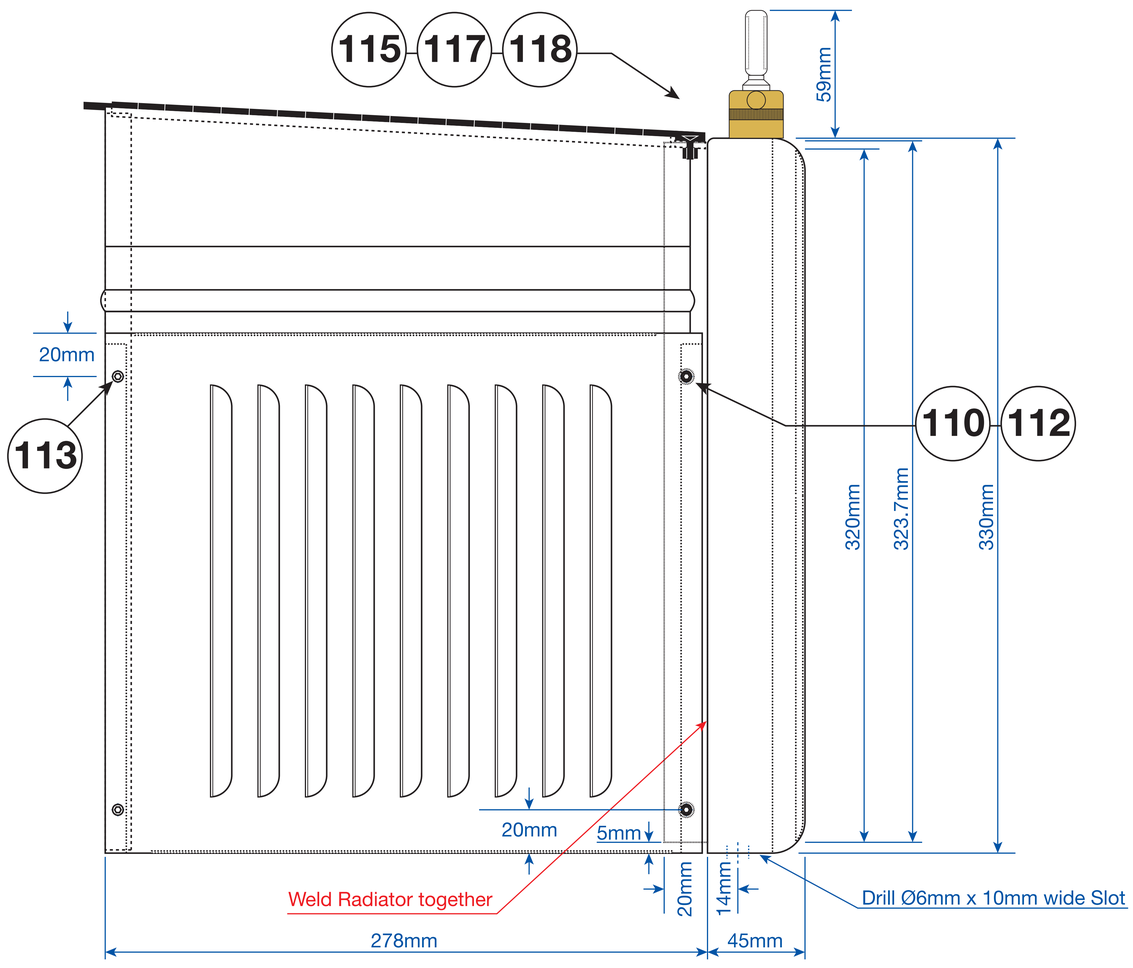


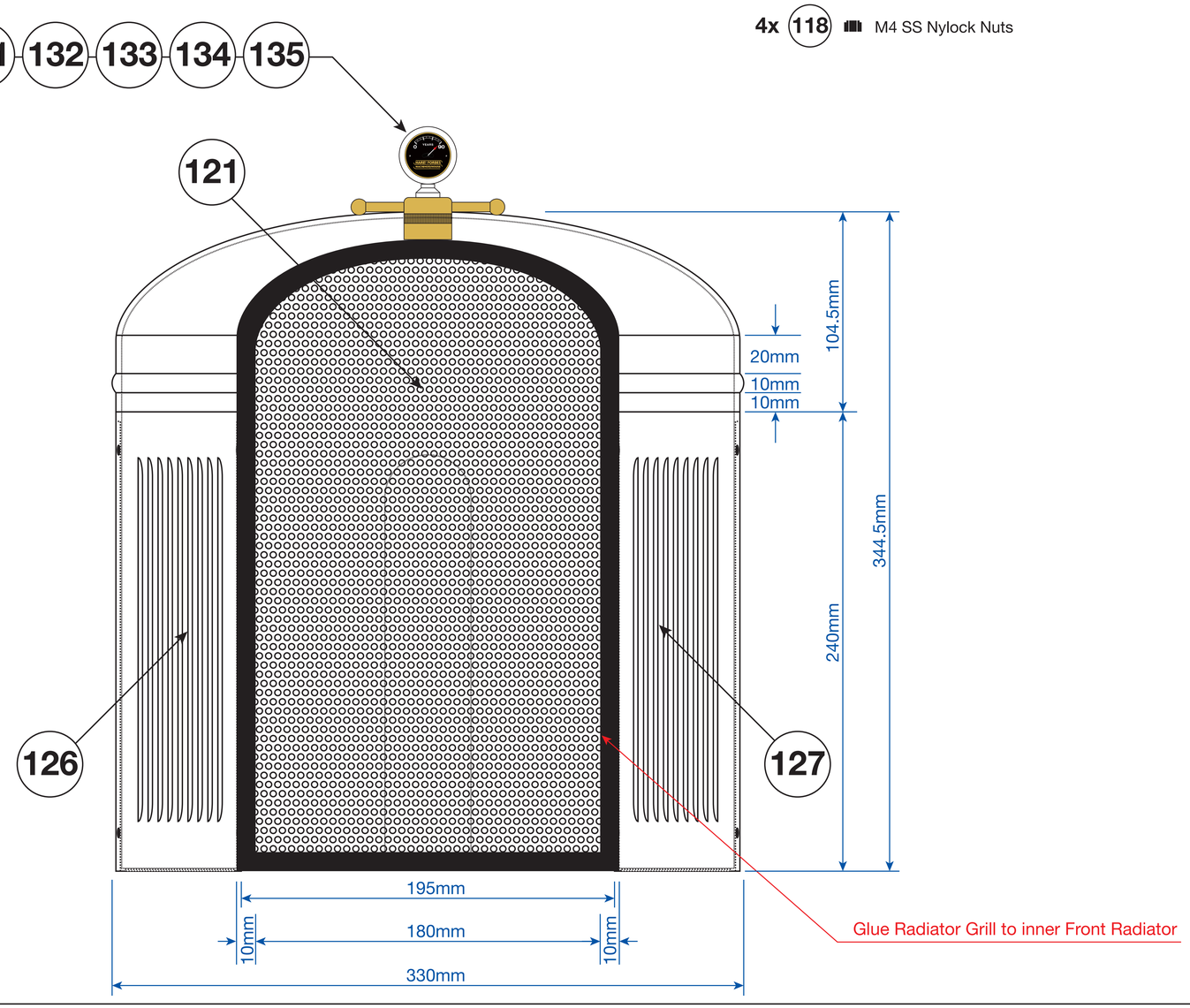

# TEMPLATES
## Radiator & Grill

| TEMPLATE | DRAWING: 22 |
|---|---|
| SCALE: 1:1 | TOLERANCE ± 2mm |

Flatbed Felix — PEDAL CAR BUILD

HARE & FORBES MACHINERYHOUSE
www.machineryhouse.com.au

Copyright © 2020 Hare and Forbes Machineryhouse
All rights reserved.

**MATERIALS LIST:**

Radiator: 35 x 784mm (1mm Mild Sheet Steel)
62 x 200mm (1mm Mild Sheet Steel)
62 x 784mm (1mm Mild Sheet Steel)
4 x (M6 x 1.0mm Nut Inserts)

Radiator Grill: 318 x 188mm (1.6mm Aluminium Perforated Pattern 218 - 3.2mm Round Holes. 4.8mm staggered pitch)

Light Support Bar: 585mm x (Ø12.7 x 1.2mm Round Commercial ERW Tube)
60mm x (9mm x 13mm Steel Flat Bar)

Raidator Buck: 390 x 325mm x (17mm thick Timber Board Formply)
198 x 328mm x (6mm thick Timber Marine Ply)
20 x (8G x 30mm Countersunk Chipboard Screws)

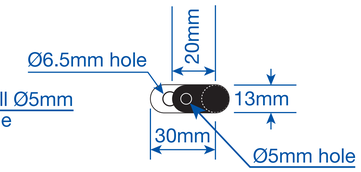


**1x 108 Head Light - Support Bar**
Ø12.7mm Tube x 1.2mm Wall

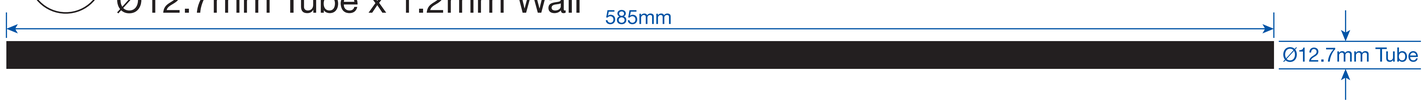


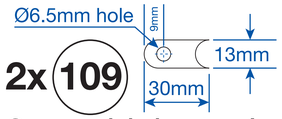


**2x 109**
3mm thick steel plate
**Head Light Brackets**

Scale (mm): 0 10 20 30 40 50 60 70 80 90 100

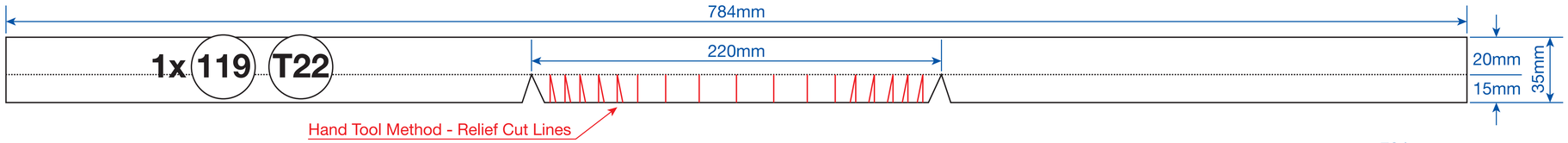


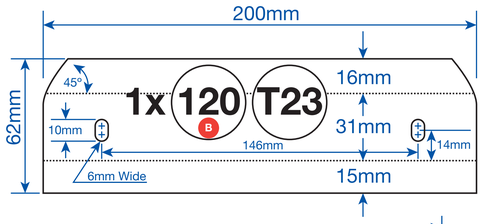


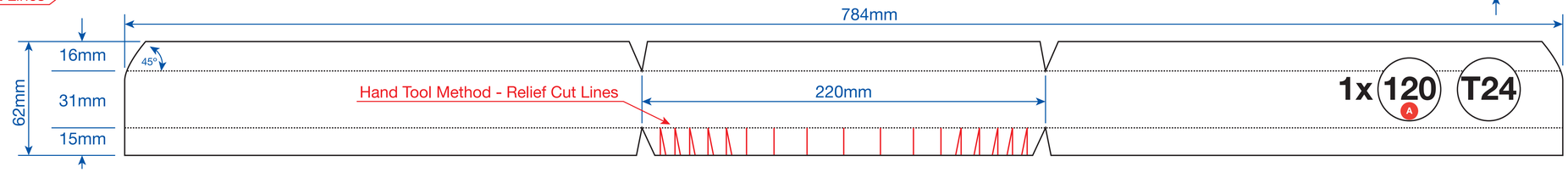


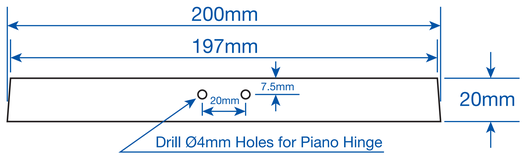


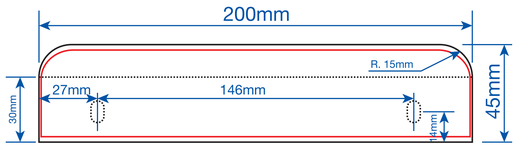


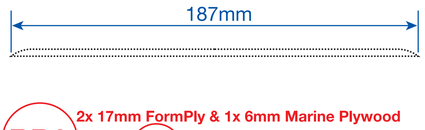


**RB6** 2x 17mm FormPly & 1x 6mm Marine Plywood
**20x B6a** (8G x 30mm Chipboard Screws)

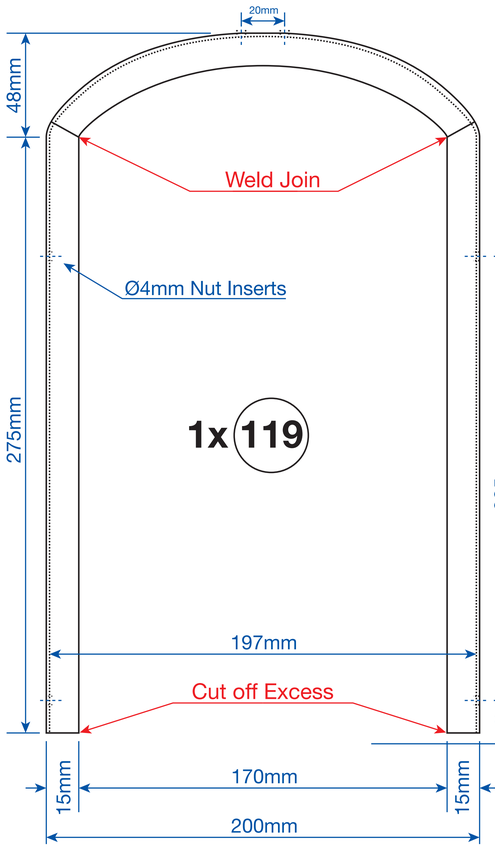


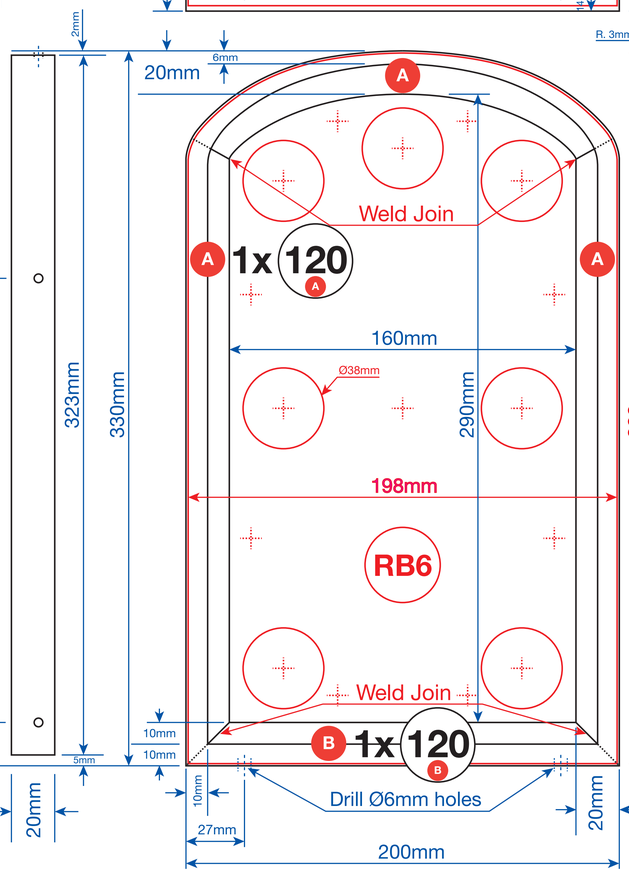


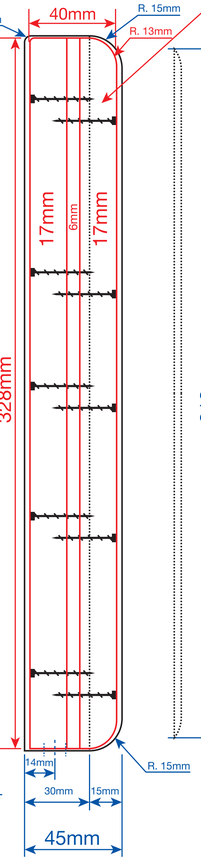


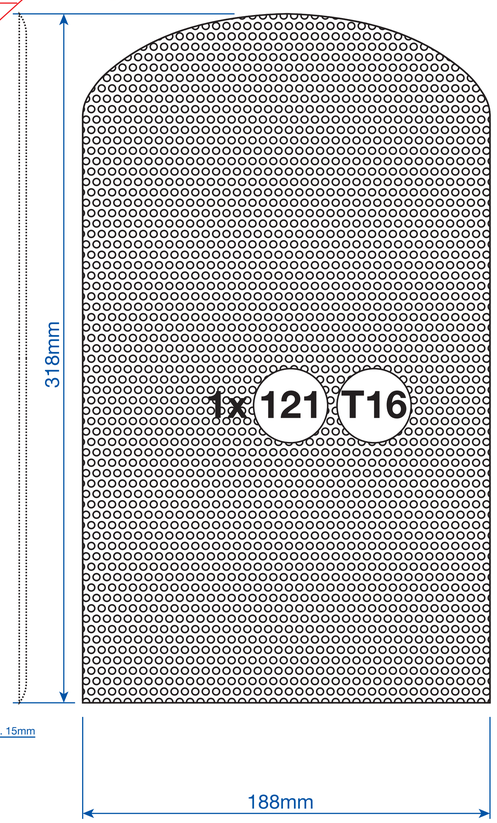


## ASSEMBLY

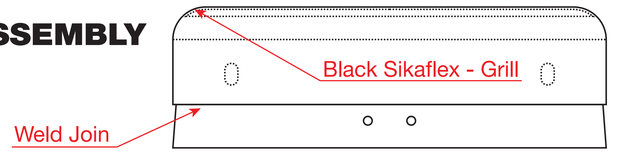


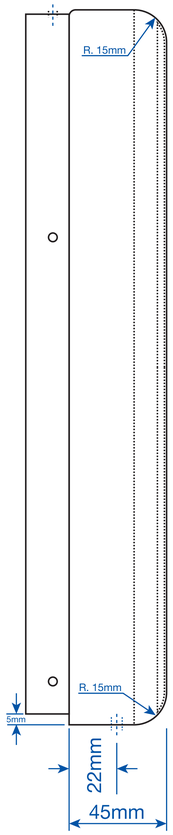


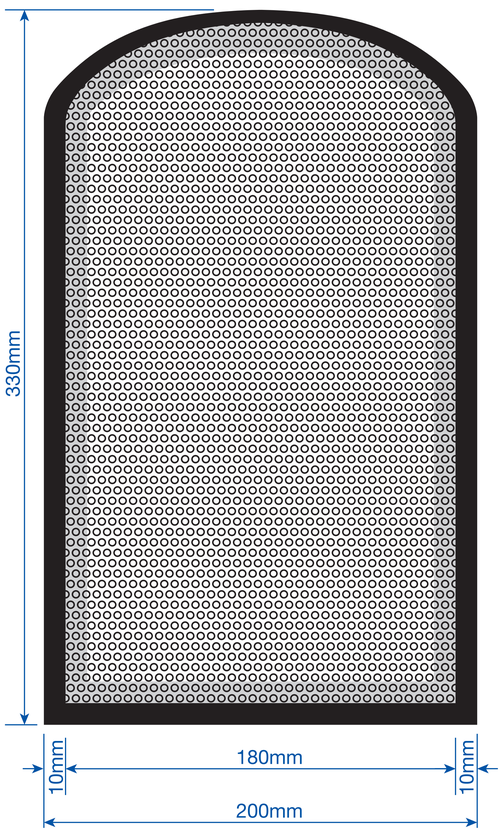

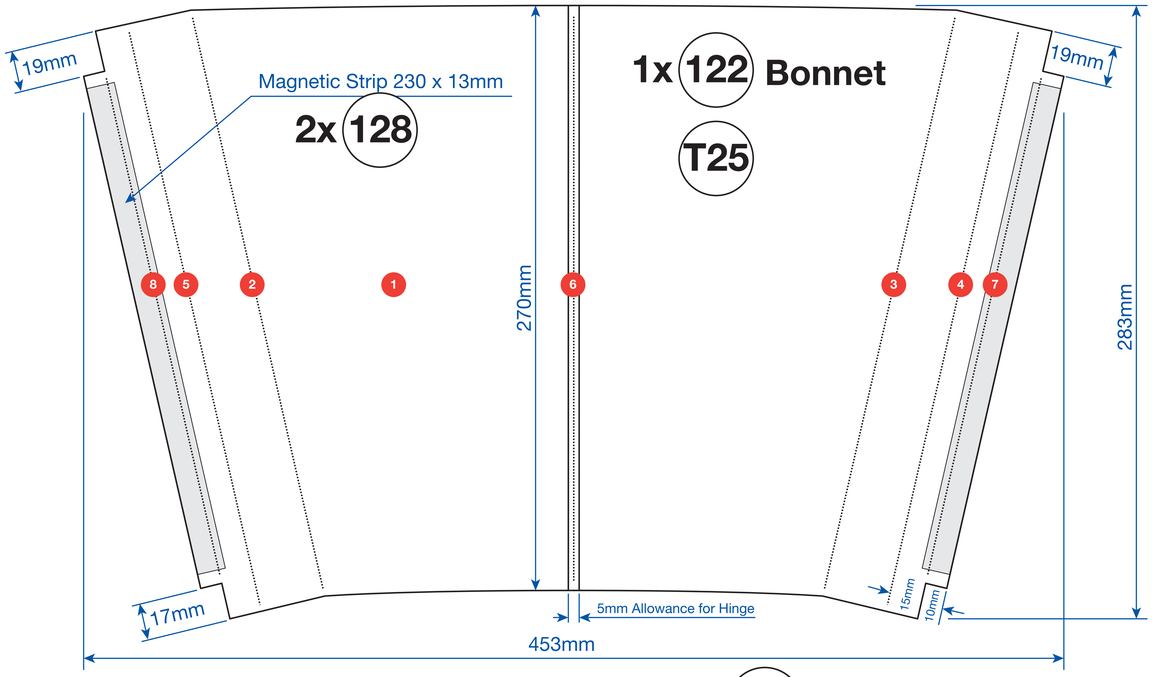


# TEMPLATE T25

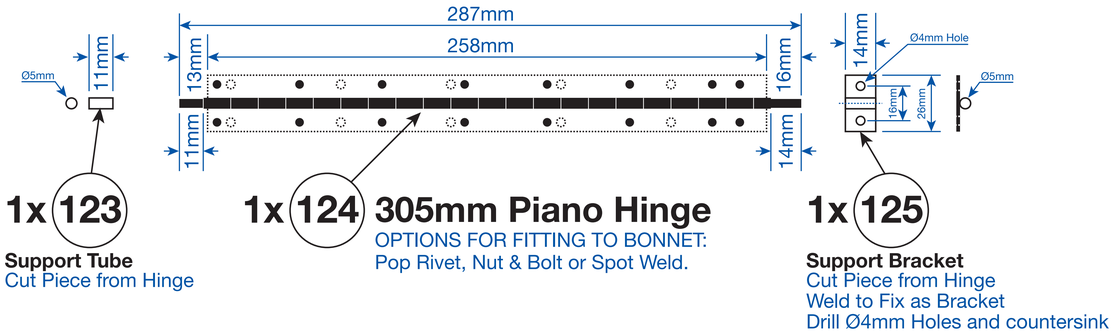


## 2x 128 Magnetic Strip 230 x 13mm

Everhang 10m x 13mm Self-Adhesive Magnetic Strip

## FORMING INSTRUCTIONS

1. Roll Curve into Bonnet
2. Fold down approx 20 degrees to fit buck
3. Fold down approx 20 degrees to fit buck
4. Swage using 3/8" Bead Rolls
5. Swage using 3/8" Bead Rolls
6. Cut Centre of Bonnet - with 5mm allowance for hinge
7. Fold down 90 degrees
8. Fold down 90 degrees

Flatbed Felix
PEDAL CAR BUILD

HARE & FORBES MACHINERYHOUSE
www.machineryhouse.com.au

Copyright © 2020 Hare and Forbes Machineryhouse
All rights reserved.

**TEMPLATES**
**Bonnet Parts**

| TEMPLATE | DRAWING: 23 |
|---|---|
| SCALE: 1:1 | TOLERANCE ± 2mm |

**MATERIALS LIST:**
Bonet Parts: 453 x 290mm (1mm Thick Mild Sheet Steel)
Bonnet Piano Hinge: 305mm Piano Hinge
Magnetic Strip: 2 x 230mm (13mm wide Self-Adhesive Magnetic Strip)

0 10 20 30 40 50 60 70 80 90 100 Scale (mm)

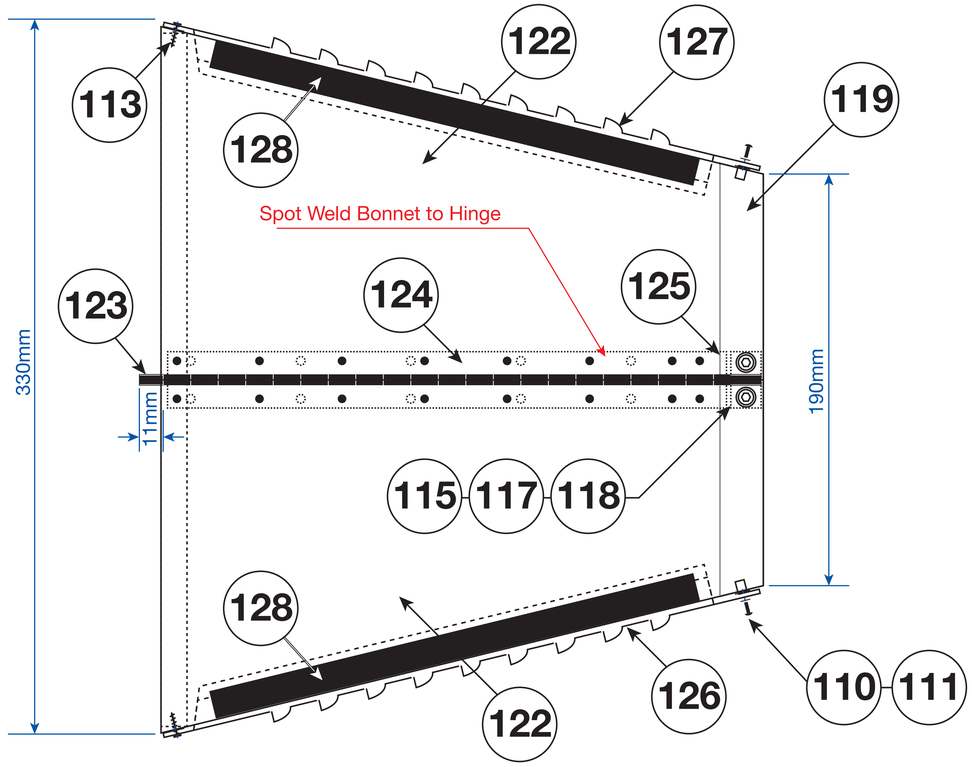


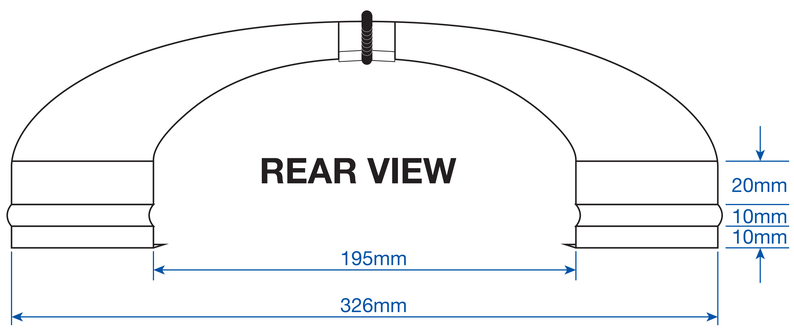


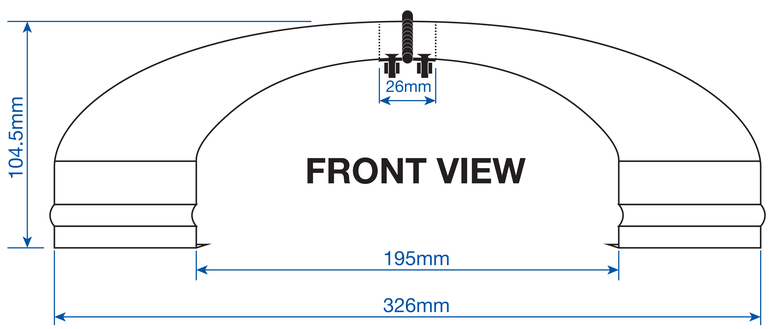


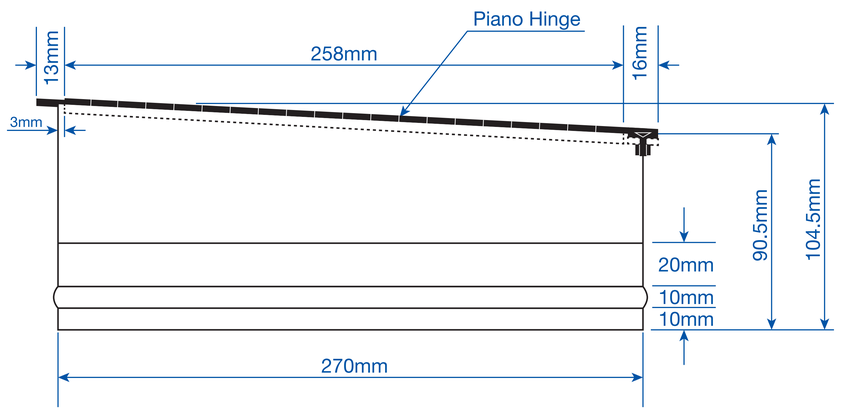

**TEMPLATES**
**Bonnet Side Panels**

| TEMPLATE | DRAWING: 24 |
|---|---|
| SCALE: 1:1 | TOLERANCE ± 2mm |

MATERIALS LIST:
Bonnet Side Panels: 610 x 275mm of 1mm Thick Mild Sheet Steel

Flatbed Felix — PEDAL CAR BUILD

HARE & FORBES MACHINERYHOUSE
www.machineryhouse.com.au

Copyright © 2020 Hare and Forbes Machineryhouse
All rights reserved.

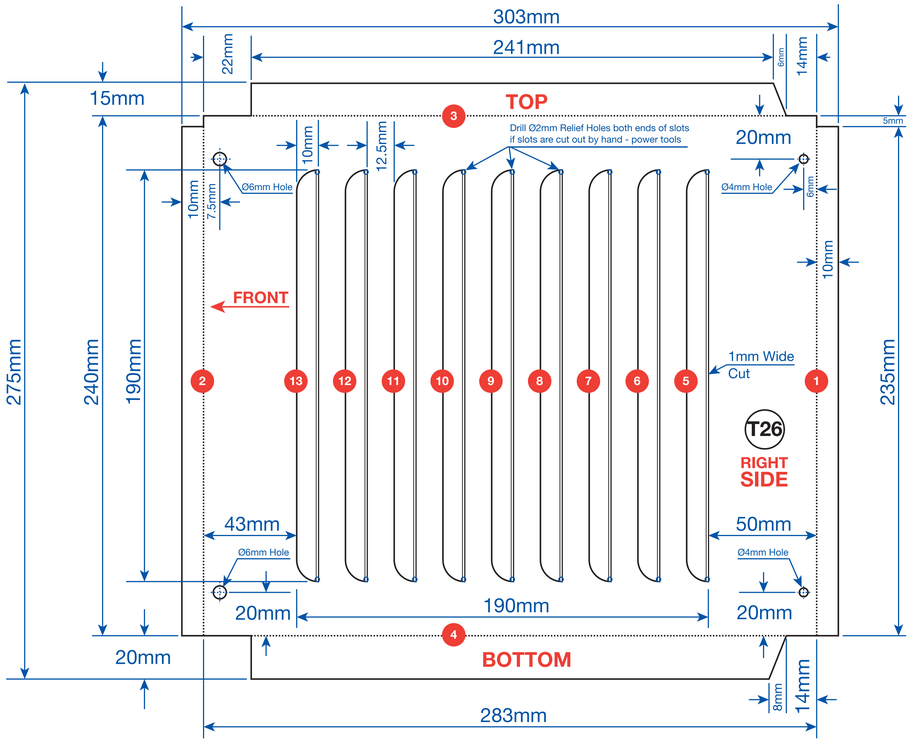


1x 126 RIGHT SIDE TEMPLATE T26

INSIDE VIEW

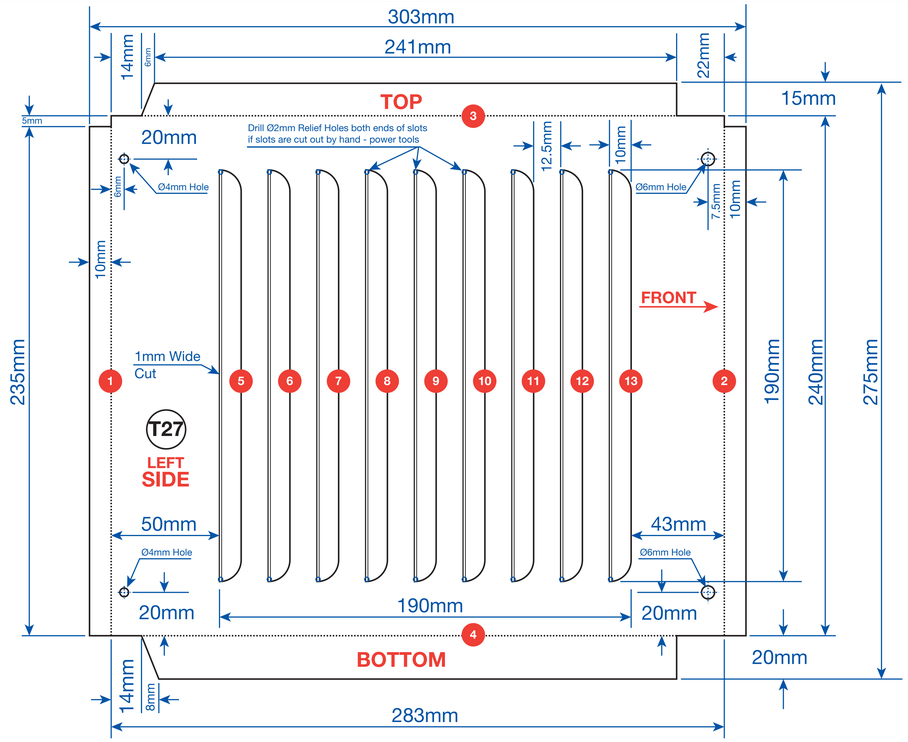


1x 127 LEFT SIDE TEMPLATE T27

# FORMING INSTRUCTIONS

1. Fold up safety fold and form flat
2. Fold up safety fold and form flat
3. Fold up 90 degrees
4. Fold up 90 degrees

5-13. Use the Lourve Hammer Form to Form all Lourves down with a forming tool and hammer.
- Right Side Template - work Right-Left on hammer form
- Left Side Template - work Left-Right on hammer form

0 10 20 30 40 50 60 70 80 90 100 Scale (mm)

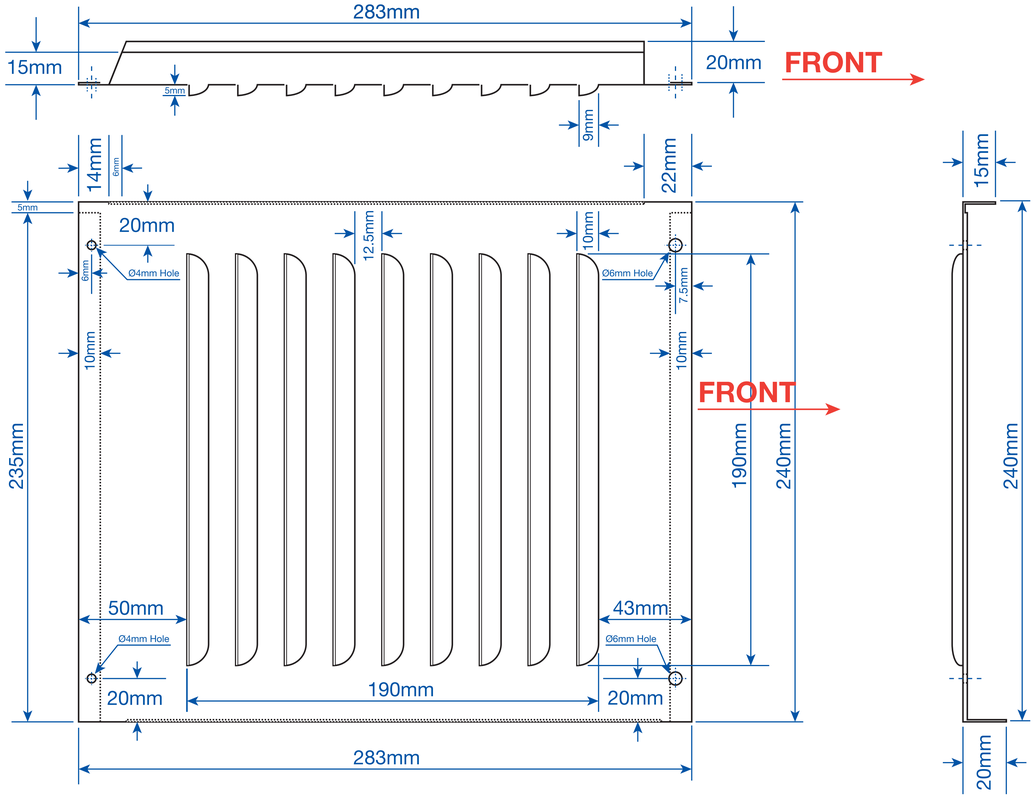


1x 126 RIGHT - BONNET SIDE PANEL

FRONT VIEW

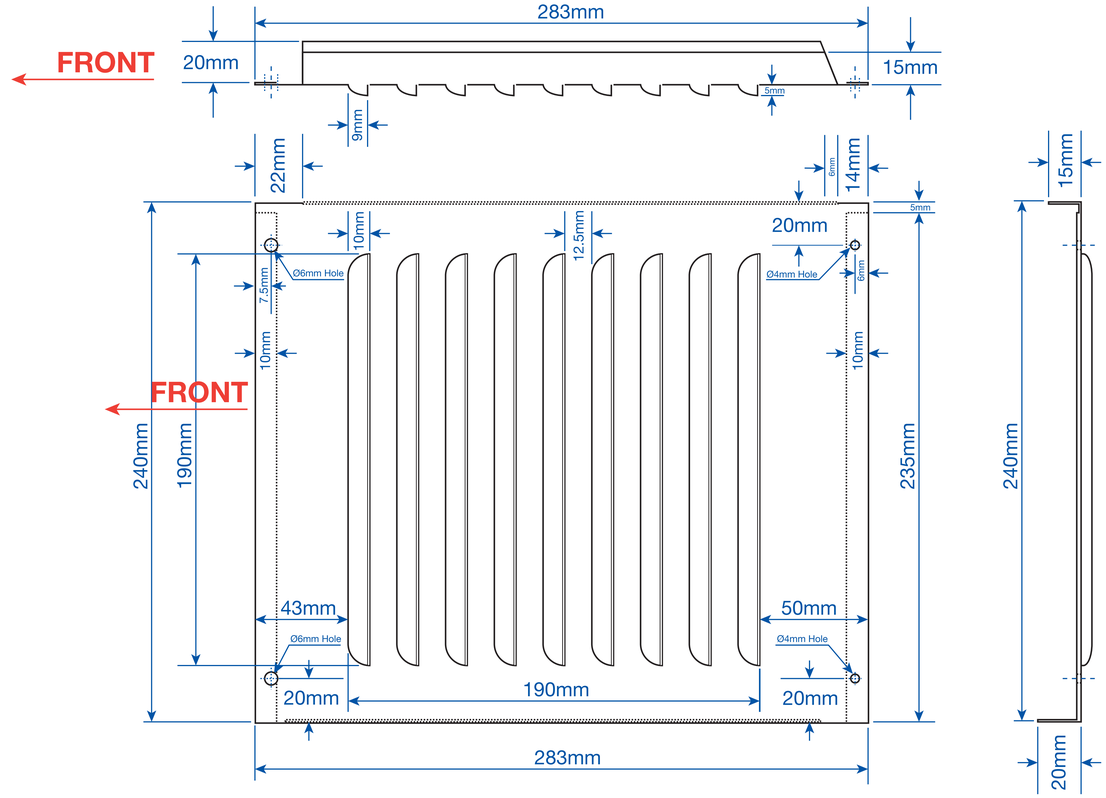


1x 127 LEFT - BONNET SIDE PANEL

# BONNET SIDE PANEL LOUVRE HAMMER FORM

**BONNET SIDE PANELS LOUVRE HAMMER FORM**

| TEMPLATE | DRAWING: 25 |
|---|---|
| SCALE: 1:1 | TOLERANCE ± 2mm |

**MATERIALS LIST:**
240 x 115mm (35mm thick hardwood)
240 x 40mm (5mm Plate steel for End Cap)
188 x 25mm (1mm Thick Sheet steel for Louvre Stop)
238mm (13x13mm Square Tube for Louvre Stop)
7 x (8G x 20mm Countersunk Rib Head Chipboard Screws)

Flatbed Felix — PEDAL CAR BUILD

HARE & FORBES MACHINERYHOUSE
www.machineryhouse.com.au

Copyright © 2020 Hare and Forbes Machineryhouse
All rights reserved.

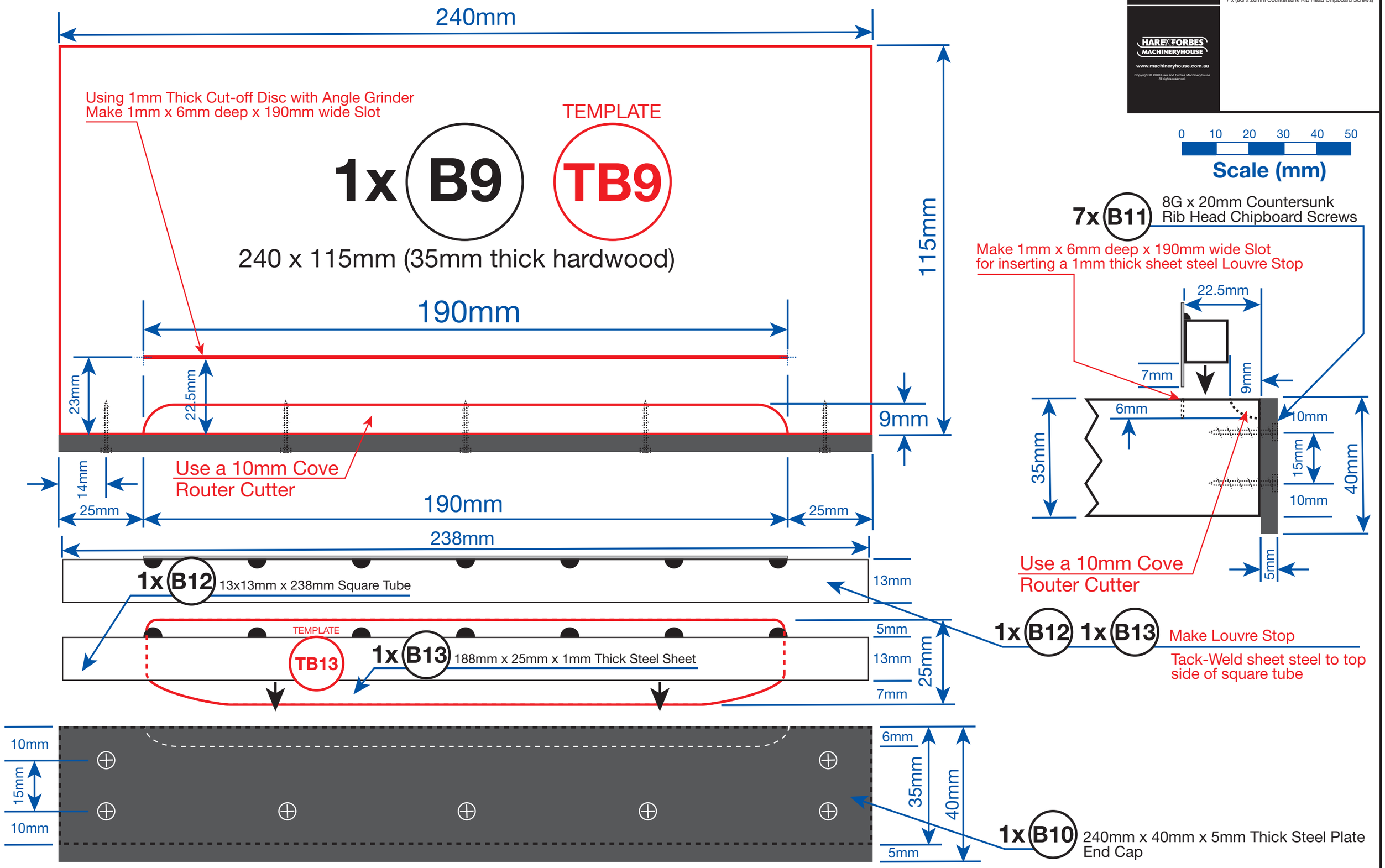

**VALANCE - TEMPLATE**

| TEMPLATE | DRAWING: 26 |
|---|---|
| SCALE: 1:1 | TOLERANCE ± 2mm |

**MATERIALS LIST:**
Valance: 150 x 300mm
(1mm sheet mild steel)

Flatbed Felix PEDAL CAR BUILD
HARE & FORBES MACHINERYHOUSE
www.machineryhouse.com.au
Copyright © 2020 Hare and Forbes Machineryhouse All rights reserved.

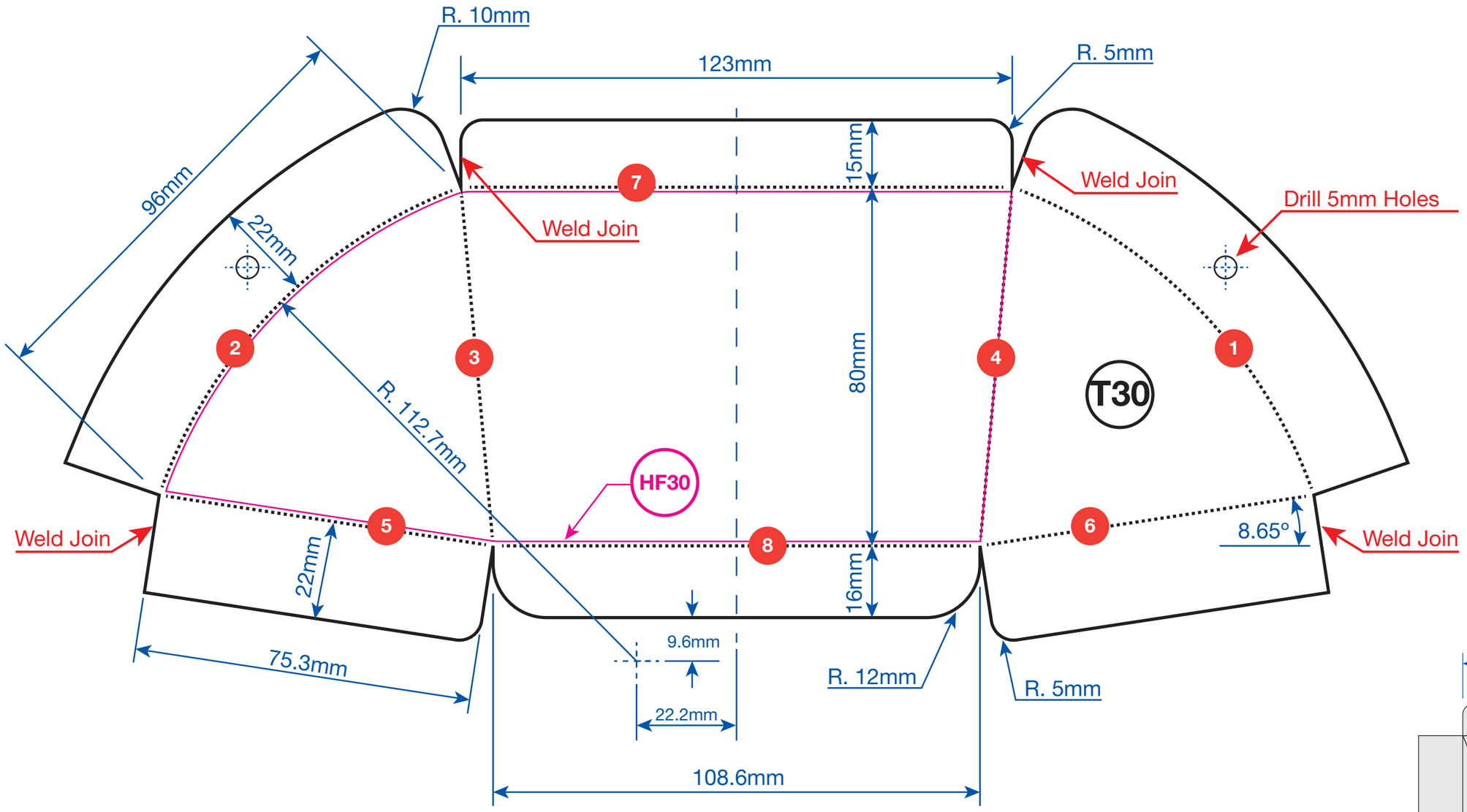


0 10 20 30 40 50
Scale (mm)

1x129

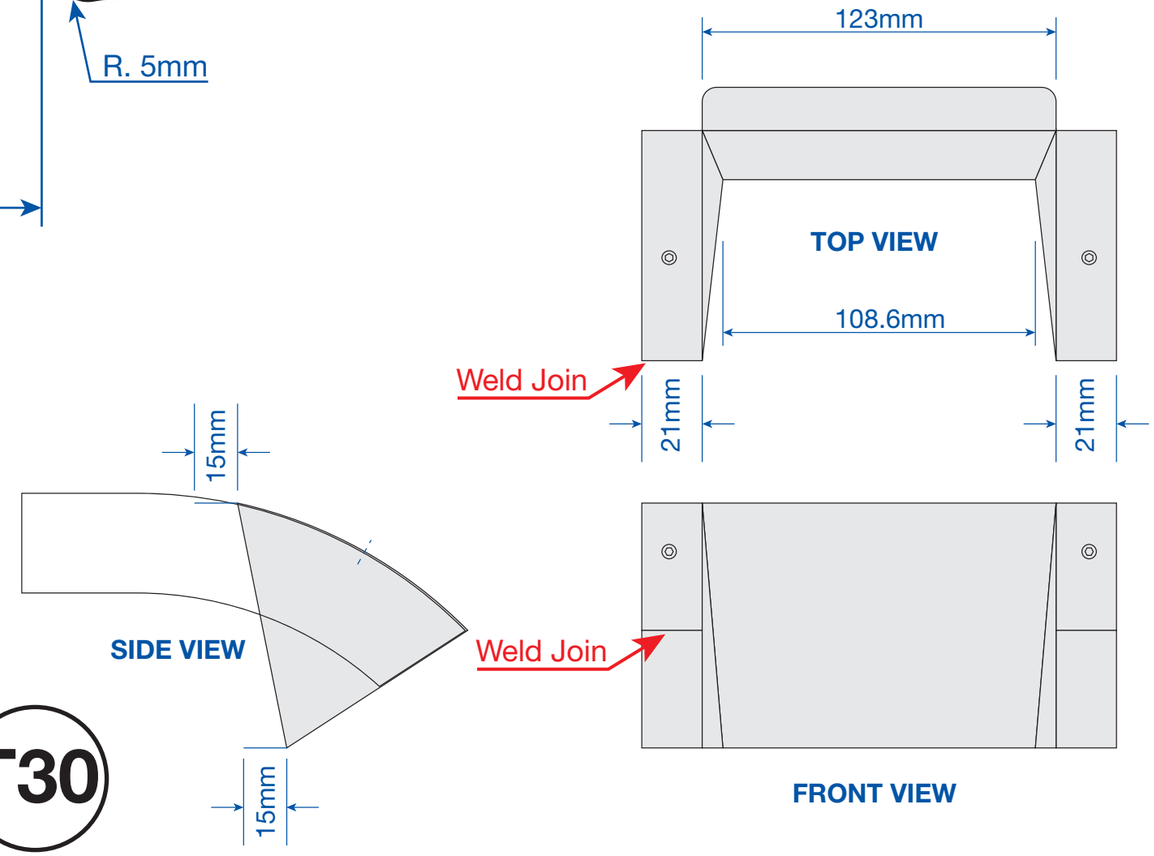


## Machine Method - INSTRUCTIONS

1. Fold 1 & 2, initiate the fold with the Electric Bead Roller with Top Tipping Wheel & Blank Lower Die. Use Round Jaw Shrinker to form the radius curve.
2. Fold 3 & 4, Use 100mm Vice Brake Jaws with Bench Vice
3. Fold 5 & 6, Use 100mm Vice Brake Jaws with Bench Vice
4. Fold 7 & 8, Use 100mm Vice Brake Jaws with Bench Vice
5. Requires metal finishing with hand tools & seaming pliers if required

## Hand Tool Method - INSTRUCTIONS

1. Cut out HF30 Template and make 2 x 17mm thick Timber pieces
2. Using a Bench Vice - Clamp the Valance Metal piece in the middle of 2 x HF30 Hammer Forms Timber pieces
3. Fold 1, 5, 6, & 7 using Hand Tools fold down
4 Release and re-postion Hammer Form - Folds 2 & 8 using Hand Tools fold down
5. Re-Position Hammer Form and fold up Folds 3 & 4 - refer to video for reference
6. Requires metal finishing with hand tools

# VALANCE TEMPLATE T30

# RADIATOR CAP TEMPERATURE GAUGE

**RADIATOR CAP TEMPERATURE GAUGE**

| TEMPLATE | DRAWING: 27 |
|---|---|
| SCALE: 1:1 | TOLERANCE ± 2mm |

**MATERIALS LIST:**
100mm x (Ø31.75mm Rod C385 Brass)
100mm x (Ø12.7mm Rod C385 Brass)
1 x (M5 x 40mm Stainless Steel Button Head Screw)

Flatbed Felix
PEDAL CAR BUILD

HARE & FORBES MACHINERYHOUSE
www.machineryhouse.com.au

Copyright © 2020 Hare and Forbes Machineryhouse
All rights reserved.

0 10 20 30 40 50
Scale (mm)

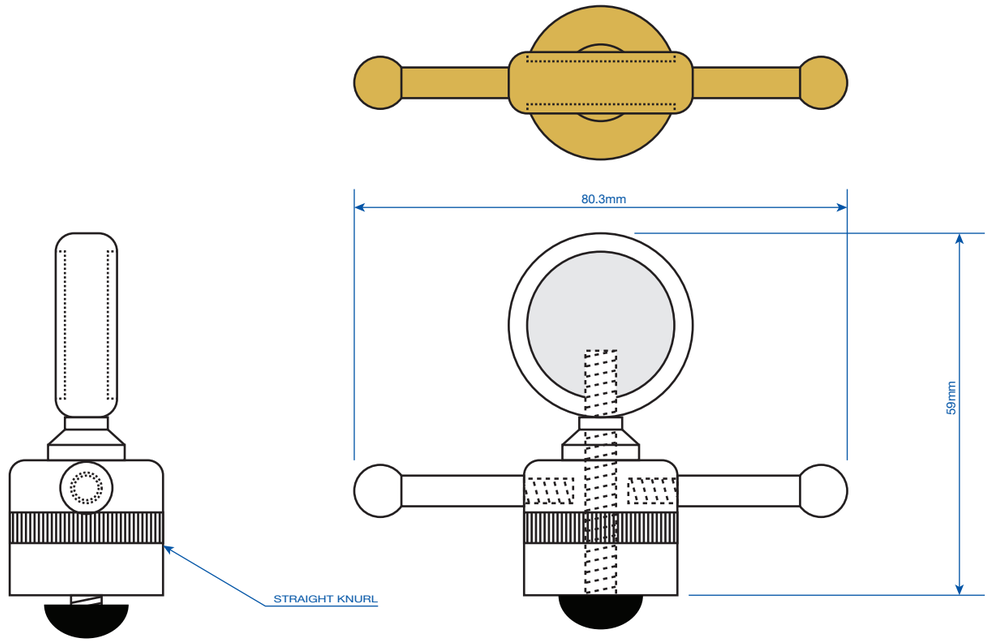


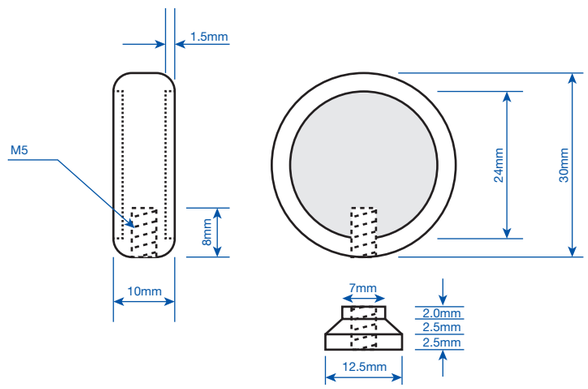


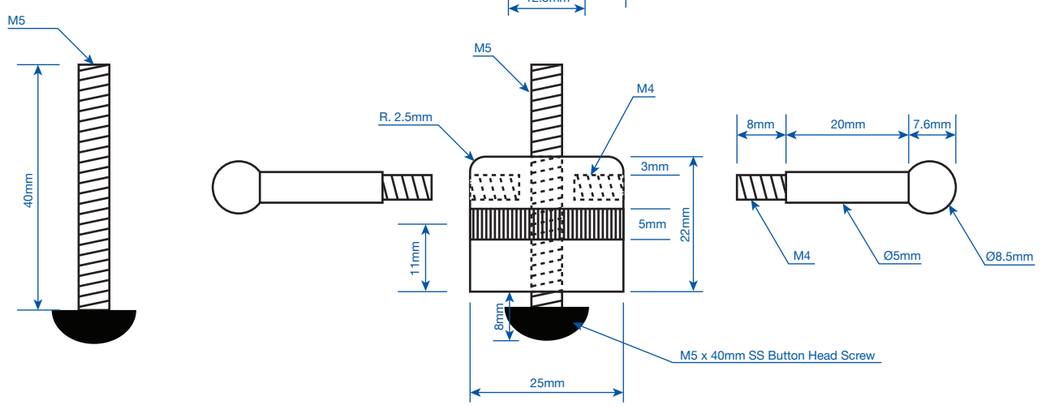


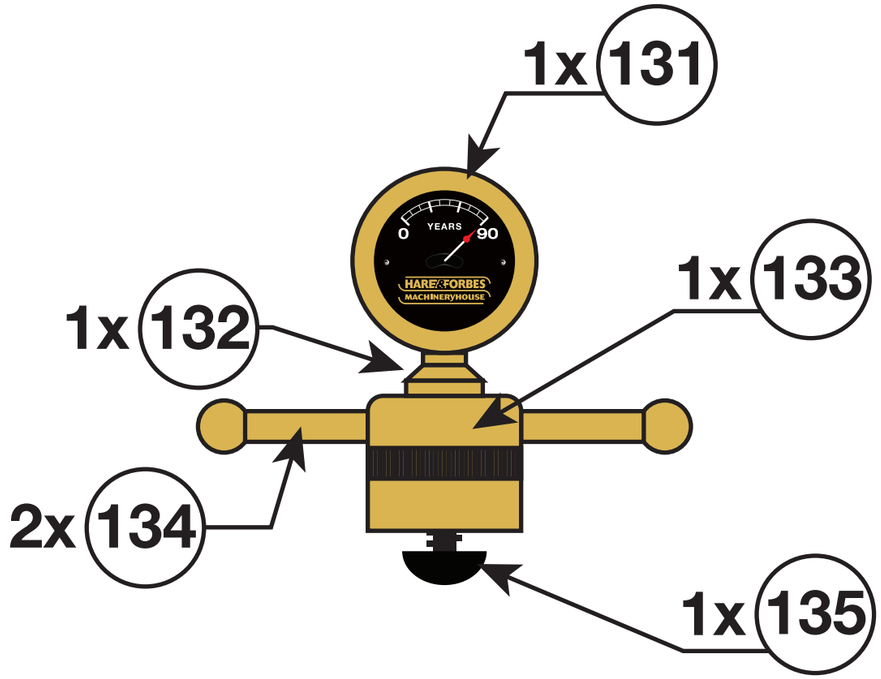


**M5 x 40mm Stainless Steel Button Head Screw**

# WOOD TRAY & DOOR ASSEMBLY

| PLAN 6 | DRAWING: 28 |
|---|---|
| SCALE: | TOLERANCE ± 2mm |

Flatbed Felix — PEDAL CAR BUILD

HARE & FORBES MACHINERYHOUSE

www.machineryhouse.com.au

Copyright © 2020 Hare and Forbes Machineryhouse
All rights reserved.

**MATERIALS LIST:**

Tray Base: 1200 x 845mm x (12mm AA Grade Mixed Hardwood Marine Plywood)
9 x (8G x 30mm Chipboard Screws)
4 x (8G 20mm Chipboard Screws)
6 x (8G 25mm Chipboard Screws)

Latch Plate: 2 x (100 x 33mm x 1mm Thick Mild Sheet Steel)
Slide Brackets: 2 x (15 x 39mm x 1mm Thick Sheet Steel)
Female Brackets: 2 x (13 x 47mm x 1mm Thick Sheet Steel)
Sliding Bar: 2 x (138 x 13 x 3mm Thick Mild Steel Flat Bar)
Door Handles: 4 x (Ø14mm x 22mm Matte Black Finger Post - Tap out to M6)
Threaded Rod: 2 x (34mm length x M6 Threaded Rod)
Screws: 8 x (7G x 12mm Yellow Zinc Plated Drywall Screws)
4 x (4G x 12mm Timber Screws)

Tray Hinges: 6 x (Hinges 60 x 100mm)
36 x (8 GA x 1/2" STS Countersunk Screws)

Toggle Latches: 2 x (60mm Toggle Latch)
10 x (8 GA x 1/2" STS Countersunk Screws)
4 x (8G 25mm Chipboard Screws)
2 x (Wooden Spacers 30 x 40 x 12mm AA Grade MHM Plywood)

Door Stops 2x 30x45mm 12mm thick plywood with 4 x 8G x 25mm Chipboard Screws

Door Frame: 550 x 810mm x (12mm AA Grade Mixed Hardwood Marine Plywood)
108 x 810mm x (12mm AA Grade Mixed Hardwood Marine Plywood)
8 x 8G x 25mm Chipboard Screws & Timber Glue

Door Bottom Brace & Wedges: 1200mm x (Porta 30 x 30mm Pine DAR Timber)

Door Check: 360mm (12mm Leather Strap)
4 x (4.5mm Eyelets)
4 x (7G x 12mm Yellow Zinc Plated Drywall Screws)

Door Hinges: 2 x (610mm Nickel Plated Continuous Hinges)
48 x (4G 12mm Timber Screws)

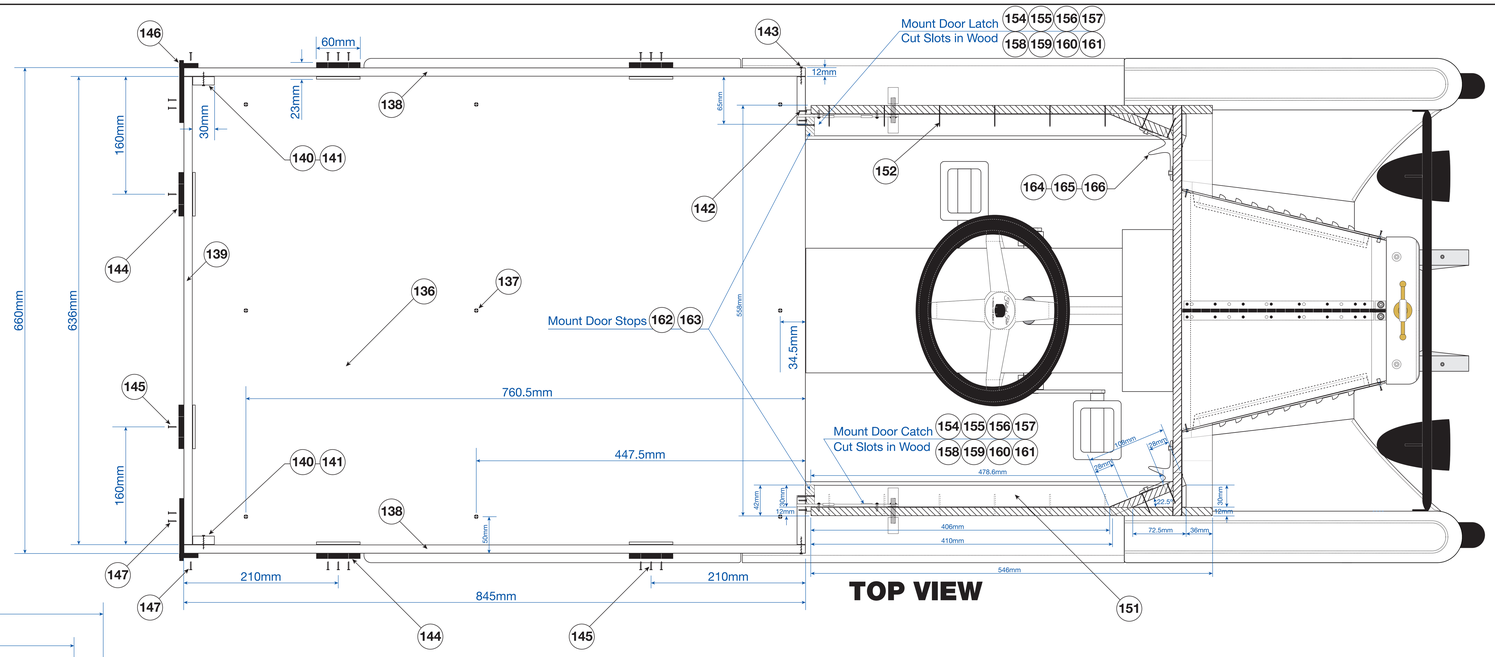


## TOP VIEW

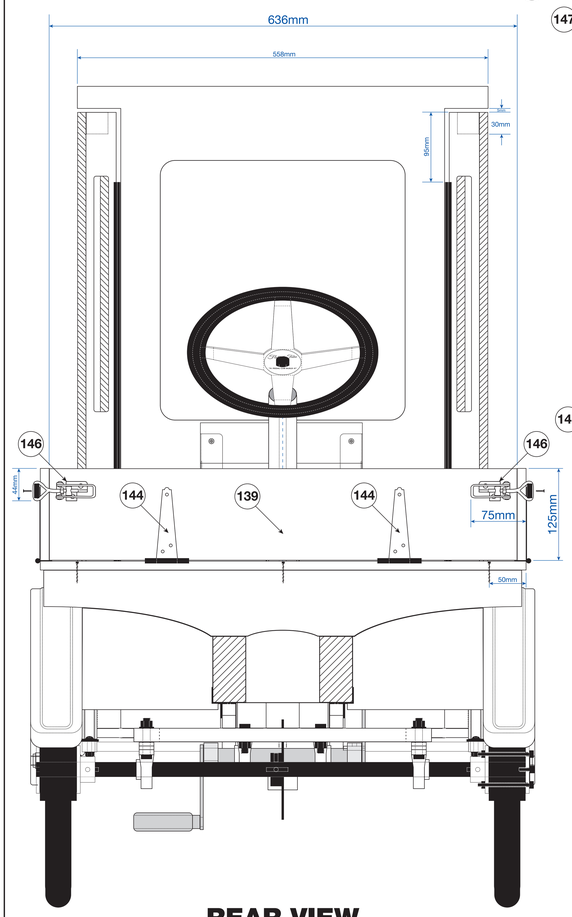


## REAR VIEW

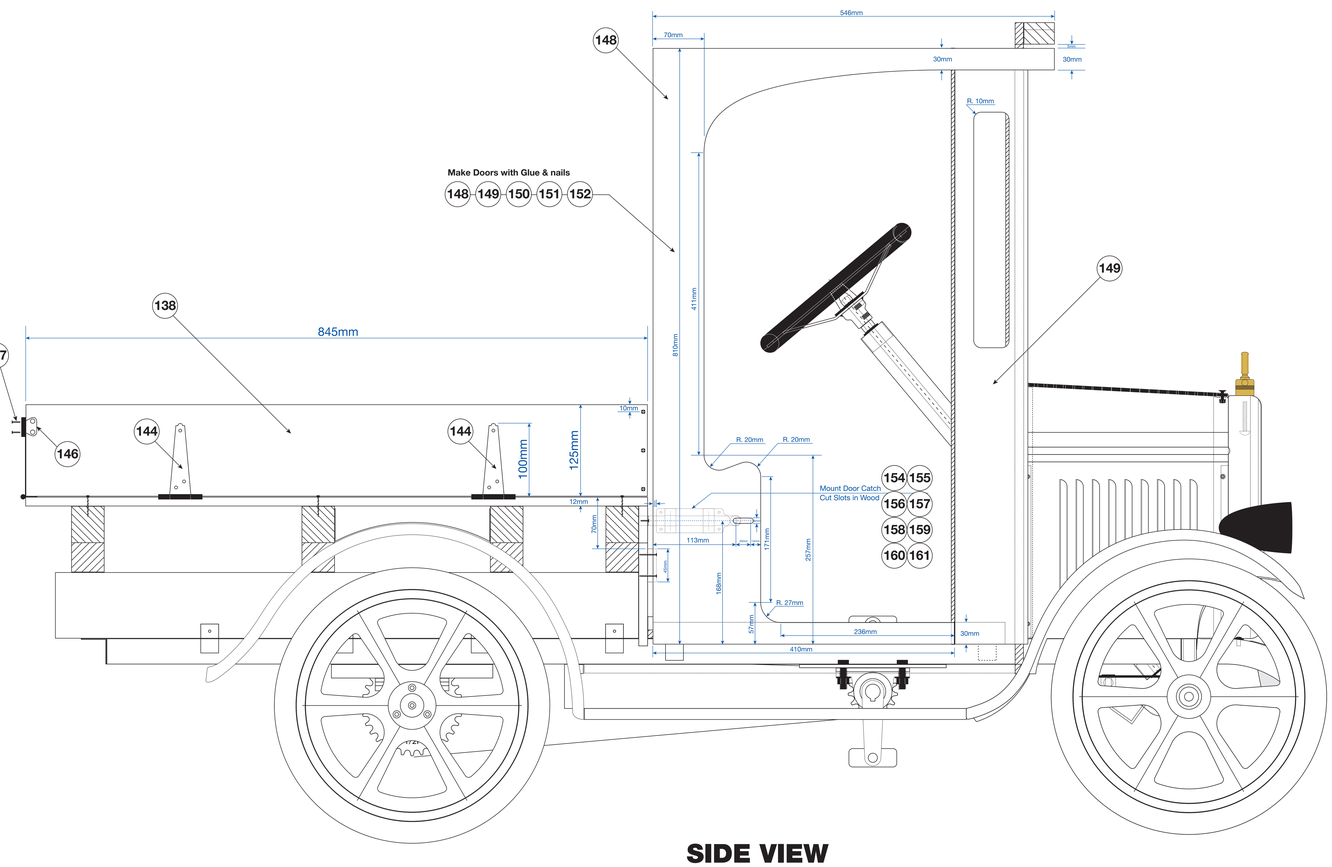


## SIDE VIEW

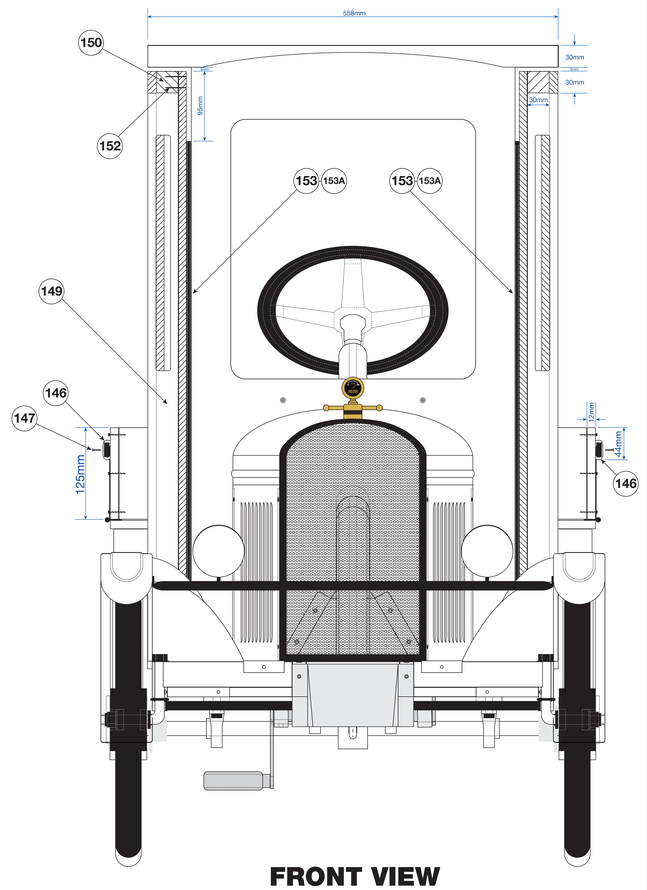


## FRONT VIEW

## PARTS LIST

1x (136) **Wood Tray Base** 660 x 845mm

9x (137) **(8G x 30mm Chipboard Screws)**

12mm AA Grade Mixed Hardwood Marine Plywood

2x (138) **Side Wood Tray** 845 x 125mm

1x (139) **Tailgate of Wood Tray** 636 x 125mm

2x (140) **Tailgate End Supports** 30 x 125mm

4x (141) **(8G x 20mm Chipboard Screws)**

2x (142) **Wood Tray Returns** 65 x 125mm

6x (143) **(8G x 25mm Chipboard Screws)**

6x (144) **Hinges 60 x 100mm** — 60mm, 23mm, 100mm, 60mm

36x (145) **8 GA x 1/2" STS Countersunk Screws**

2x (146) **60mm Toggle Latches**

10x (147) **8 GA x 1/2" STS Countersunk Screws**

2x (148) **Doors** 12mm AA Grade Mixed Hardwood Marine Plywood

2x (149)

2x (150) **Door Wedge** 30 x 30mm Pine DAR Timber

2x (151) **Door - Bottom Brace** 30 x 30mm Pine DAR Timber

Mount Bottom Brace to doors with Glue & Screws

8x (152) **8G x 25mm Chipboard Screws**

2x (153) **610mm Nickel Plated Continuous Hinges**

48x (153A) **4G x 12mm Timber Screws**

**Door Latch**

2x (154) LATCH PLATE 1mm Thick Sheet Steel

4x (155) SLIDE BRACKET TEMPLATE 1mm Thick Sheet Steel

4x (157) DOOR HANDLES Ø14mm Finger Posts M6 Thread

2x (156) SLIDING BAR 13mm x 3mm Thick Flat Bar

2x (158) M6 Threaded Rod 34mm long

8x (160) 7G x 12mm Yellow Zinc Plated Drywall Screws

4x (161) 4G x 12mm Timber Screws

2x (159) FEMALE BRACKET TEMPLATE 1mm Thick Sheet Steel

**Door Stops**

2x (162) 12mm Thick Marine Plywood — R. 30mm, 30mm, 60mm

4x (163) 8G x 25mm Chipboard Screws

**Door Check - Leather Strap with eylets**

2x (164) — 180mm, 15mm

4x (165) 7G x 12mm Yellow Zinc Plated Drywall Screws

4x (166) Ø4mm eyelets

140mm, 15mm, 20mm

# TEMPLATES
## Doors

| TEMPLATE | DRAWING: 29 |
|---|---|
| SCALE: 1:1 | TOLERANCE ± 2mm |

Flatbed Felix — PEDAL CAR BUILD

HARE & FORBES MACHINERYHOUSE

www.machineryhouse.com.au

Copyright © 2020 Hare and Forbes Machineryhouse
All rights reserved.

**MATERIALS LIST:**
Door Frame: (12mm AA Grade Mixed Hardwood Marine Plywood) 2440 x 1220mm sheet
Door Wood Brace & Wedges: 1200mm x (Porta 30 x 30mm Pine DAR Timber)
8 (8G x 25mm Chipboard Screws)
Timber Glue
Door Hinges: 2 x (610mm Nickel Plated Continuous Hinges)
48 x (4G 12mm Timber Screws)

0 10 20 30 40 50 60 70 80 90 100 Scale (mm)

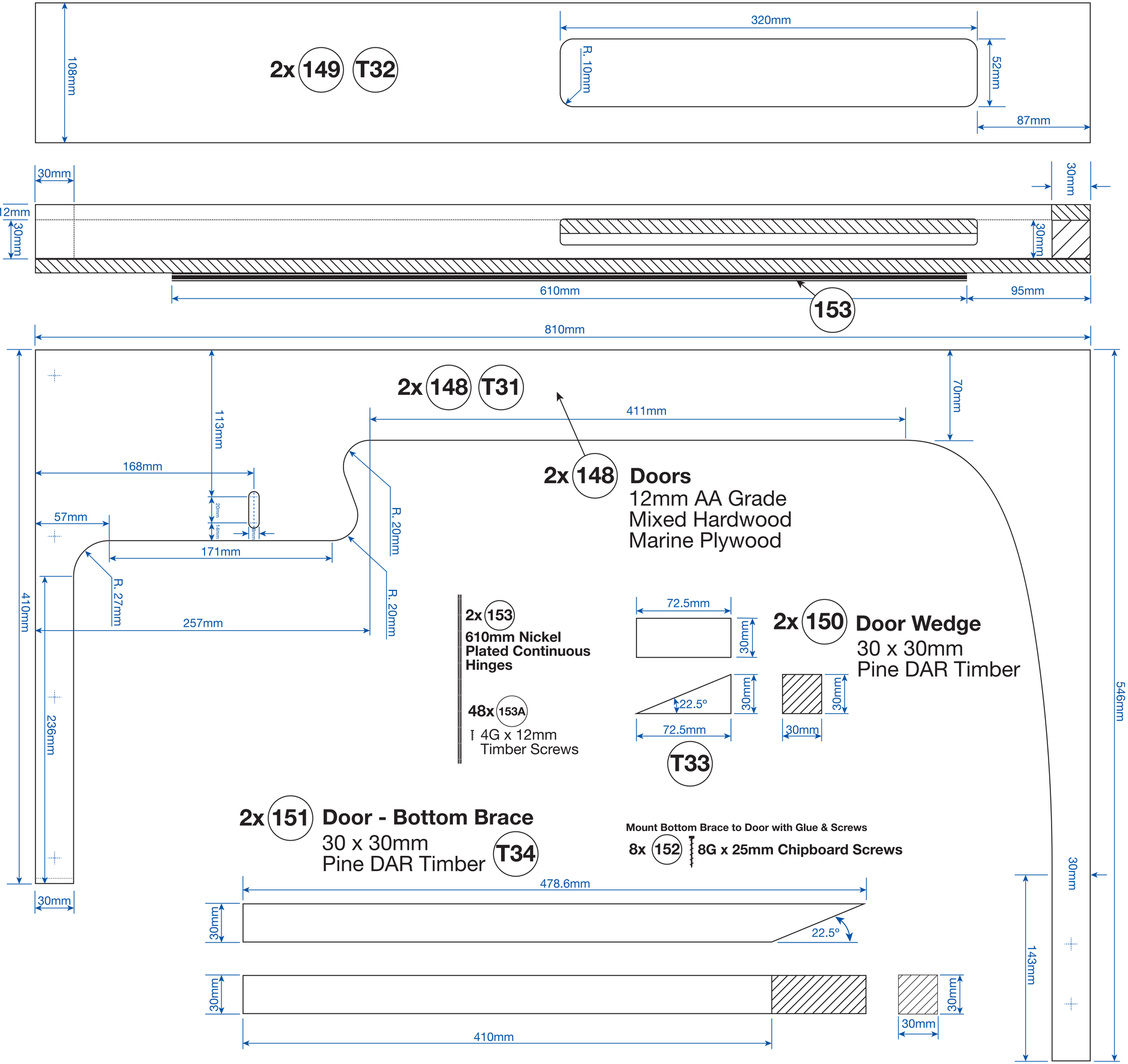

# DOOR LATCH

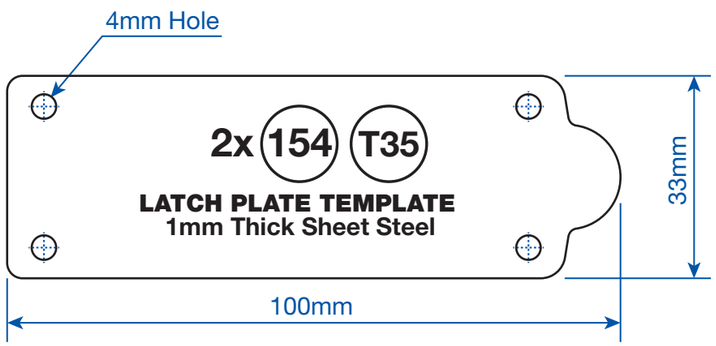


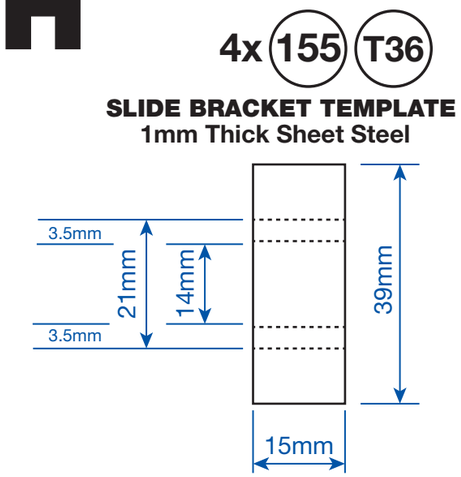


8x 160 — 7G x 12mm Yellow Zinc Plated Drywall Screws

4x 161 — 4G x 12mm Timber Screws

4x 162 — 8G x 25mm Timber Screws

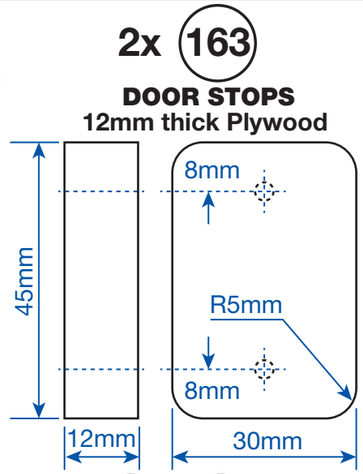


**DOOR LATCH PARTS**

| TEMPLATE | DRAWING: 30 |
|---|---|
| SCALE: 1:1 | TOLERANCE ± 2mm |

**MATERIALS LIST:**
Latch Plate: 2 x(100 x 33mm x 1mm Thick Mild Sheet Steel)
Slide Brackets: 4 x (15 x 39mm 1mm Thick Sheet Steel)
Female Brackets: 2 x (13 x 47mm 1mm Thick Sheet Steel)
Sliding Bar: 2 x (138 x 13 x 3mm Thick Mild Steel Flat Bar)
Door Handles: 4 x (Ø14mm x 22mm Matte Black Finger Post)
Threaded Rod: 2 x (34mm length M6 Threaded Rod)
Screws: 8 x (7G x 12mm Yellow Zinc Plated Drywall Screws)
4 x (4G x 12mm Timber Screws)
Door Stops: 2 x (30 x 45mm x 12mm thick marine plywood)
4 x 8G x 25mm timber screws

Flatbed Felix — PEDAL CAR BUILD

HARE & FORBES MACHINERYHOUSE
www.machineryhouse.com.au

Copyright © 2020 Hare and Forbes Machineryhouse
All rights reserved.

0 10 20 30 40 50
**Scale (mm)**

**DOOR HANDLES**
**Ø14mm Matte Black Finger Post - M6 Hole**

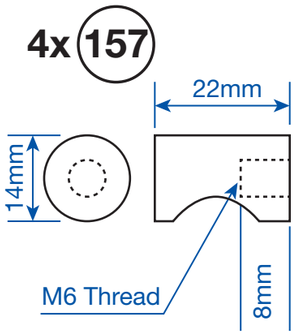


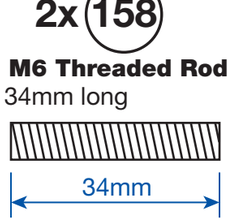


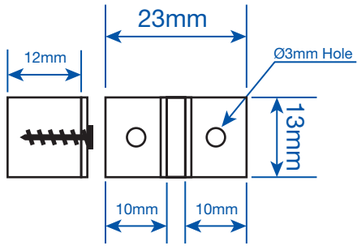


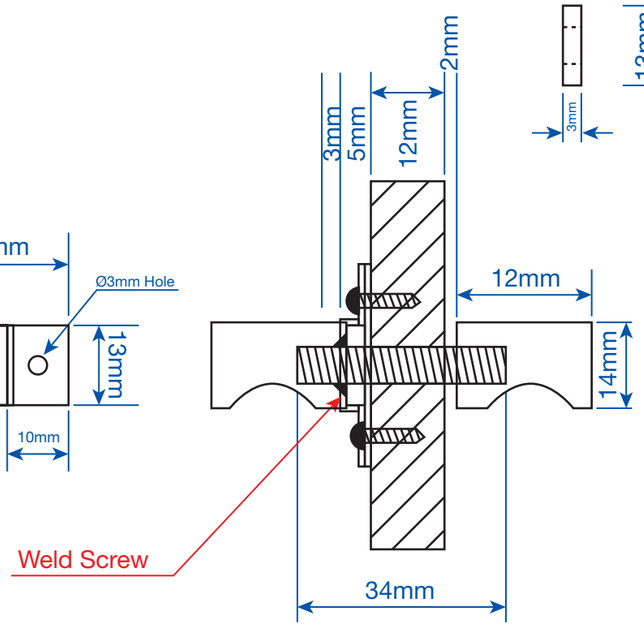


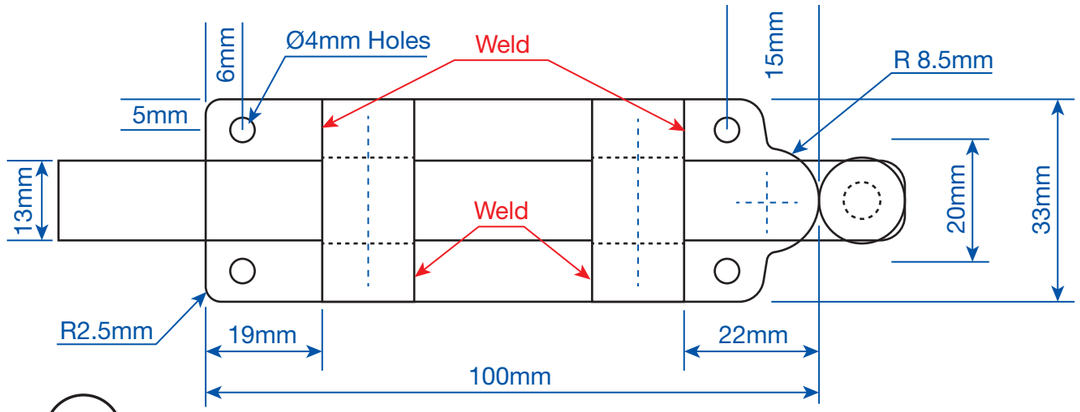


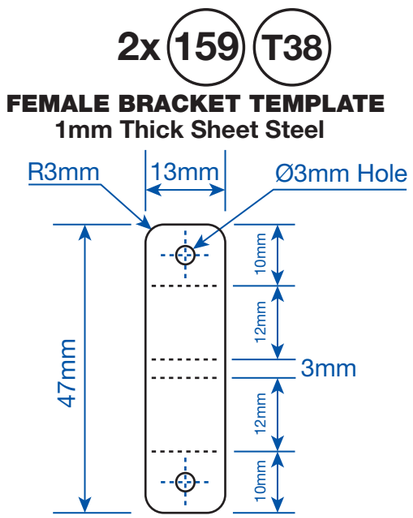


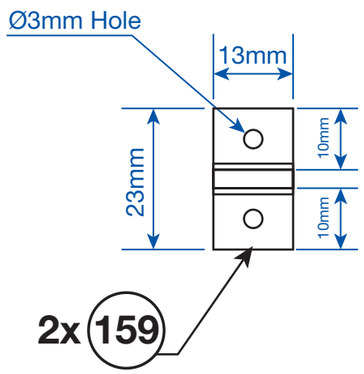


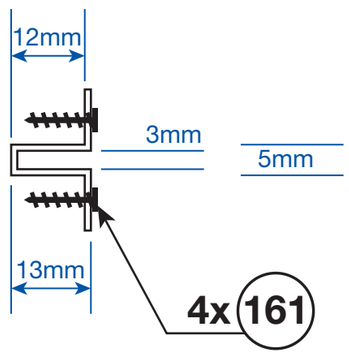


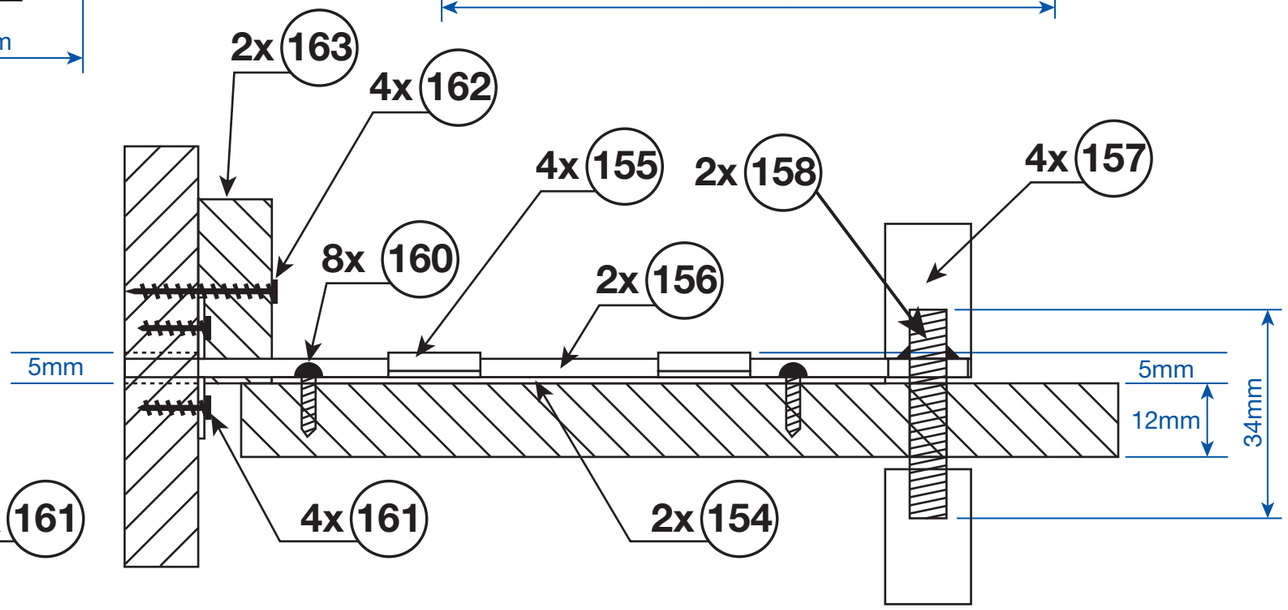

# TEMPLATES
## Seat

| TEMPLATE | DRAWING: 31 |
|---|---|
| SCALE: 1:1 | TOLERANCE ± 2mm |

**MATERIALS LIST:**
Seat Base: 490 x 460mm (19mm Thick Plywood)
6 x (8G 40mm Timber Screws)
Upholstery: 50mm thick Foam with stapled vinyl lining with double stiching.

Flatbed Felix
PEDAL CAR BUILD

HARE & FORBES MACHINERYHOUSE
www.machineryhouse.com.au

Copyright © 2020 Hare and Forbes Machineryhouse
All rights reserved.

0 10 20 30 40 50 60 70 80 90 100 Scale (mm)

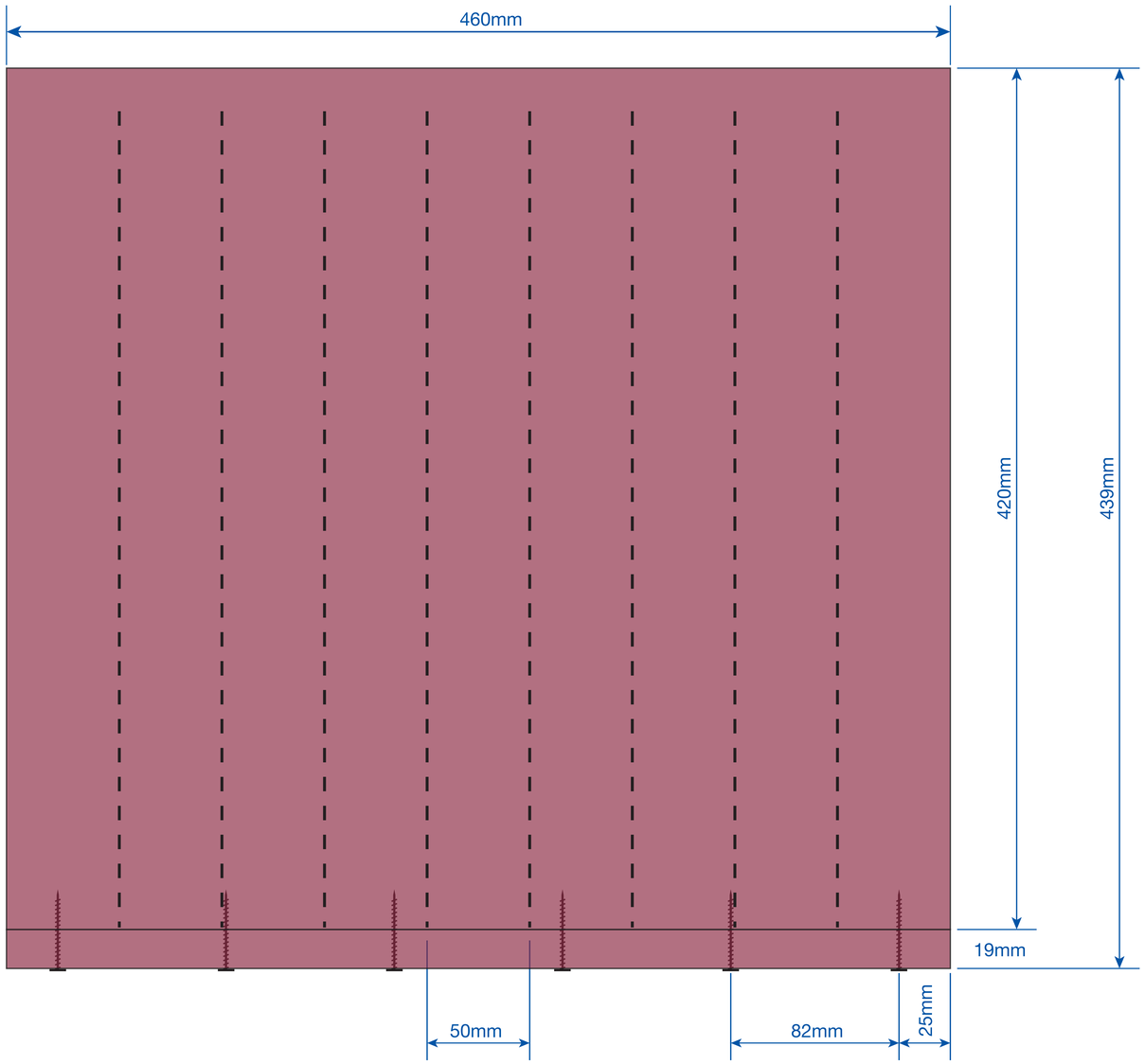


**1x 169** Vinyl Trim Upholstery

**6x 170** 8G x 40mm Chipboard Screws

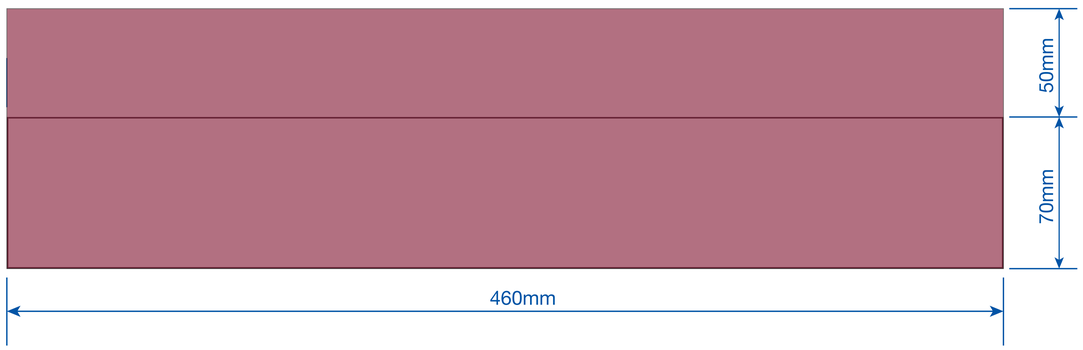


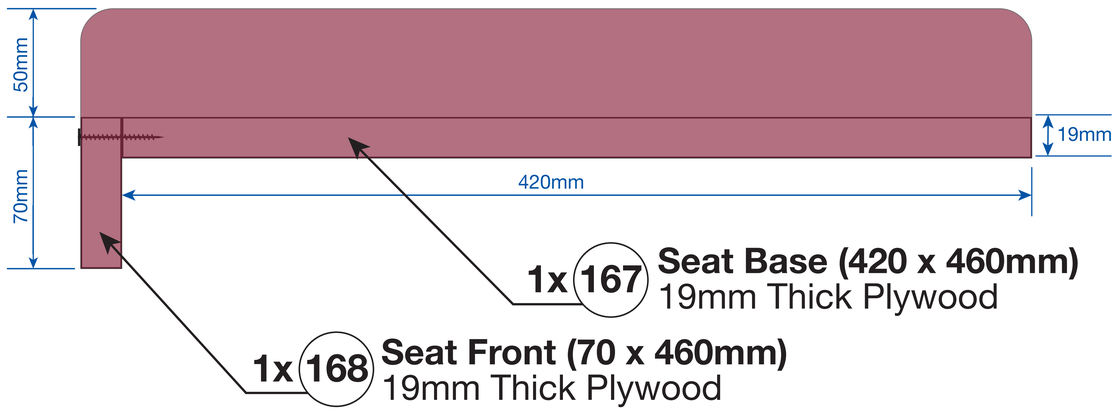

# CUTTING GUIDE - 12mm Marine Plywood 1220 x 2440mm Sheet

**TEMPLATE**
**12mm Plywood Sheet**

| | |
|---|---|
| TEMPLATE | DRAWING: 32 |
| SCALE: | TOLERANCE ± 2mm |

**MATERIALS LIST:**
1220 x 2440mm - 12mm Marine plywood sheet

Flatbed Felix
PEDAL CAR BUILD

HARE & FORBES MACHINERYHOUSE
www.machineryhouse.com.au

Copyright © 2020 Hare and Forbes Machineryhouse
All rights reserved.

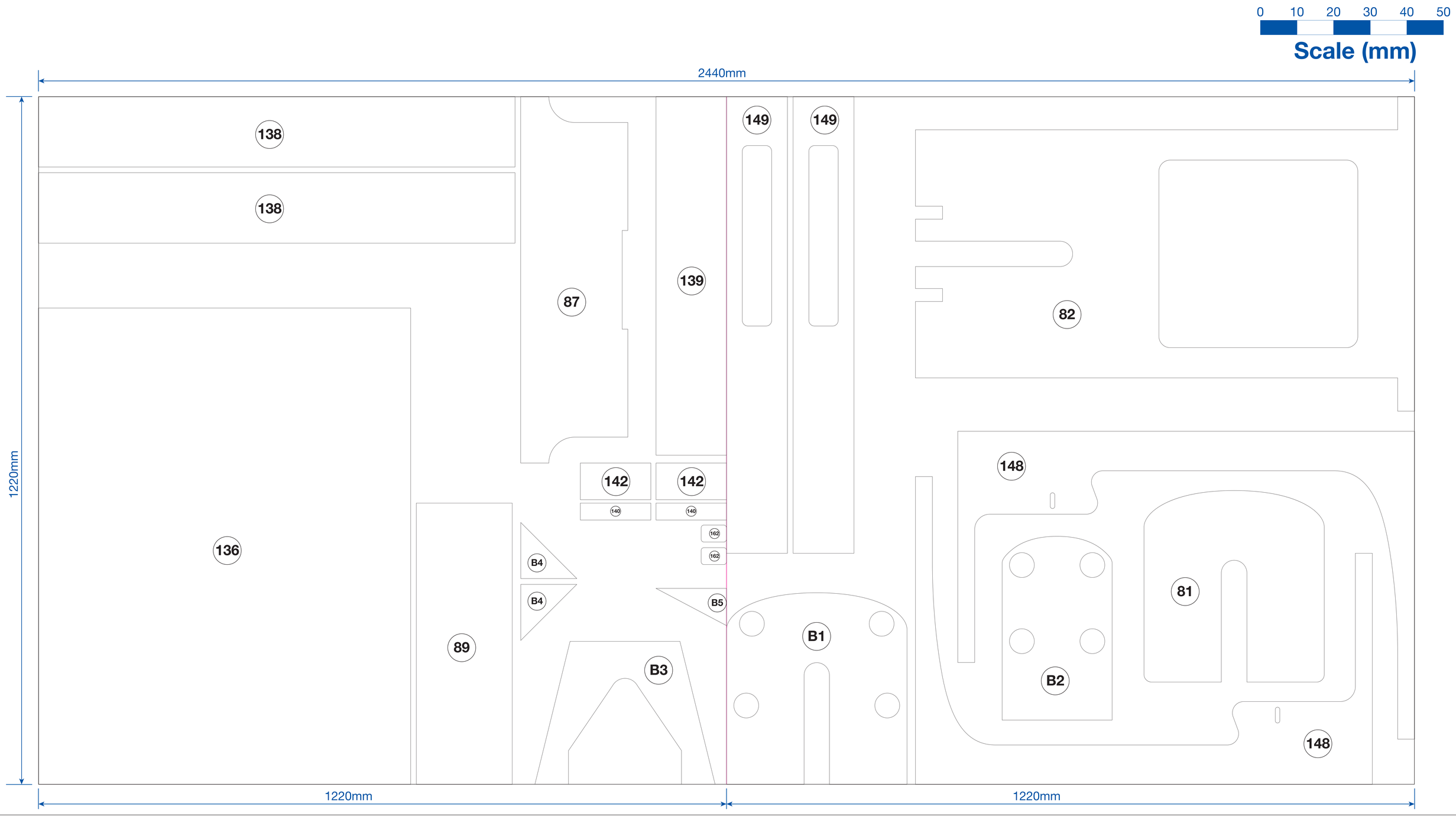

# CUTTING GUIDE - 1mm Mild Steel Cold Rolled 1220 x 1220mm Sheet

**TEMPLATE**
**1mm Mild Steel Sheet**

| | |
|---|---|
| TEMPLATE | DRAWING: 33 |
| SCALE: | TOLERANCE ± 2mm |

**MATERIALS LIST:**
1220 x 1220mm - 1mm Mild Steel Cold Rolled sheet

Flatbed Felix
PEDAL CAR BUILD

HARE & FORBES MACHINERYHOUSE
www.machineryhouse.com.au

Copyright © 2020 Hare and Forbes Machineryhouse
All rights reserved.

0 50 100 Scale (mm)

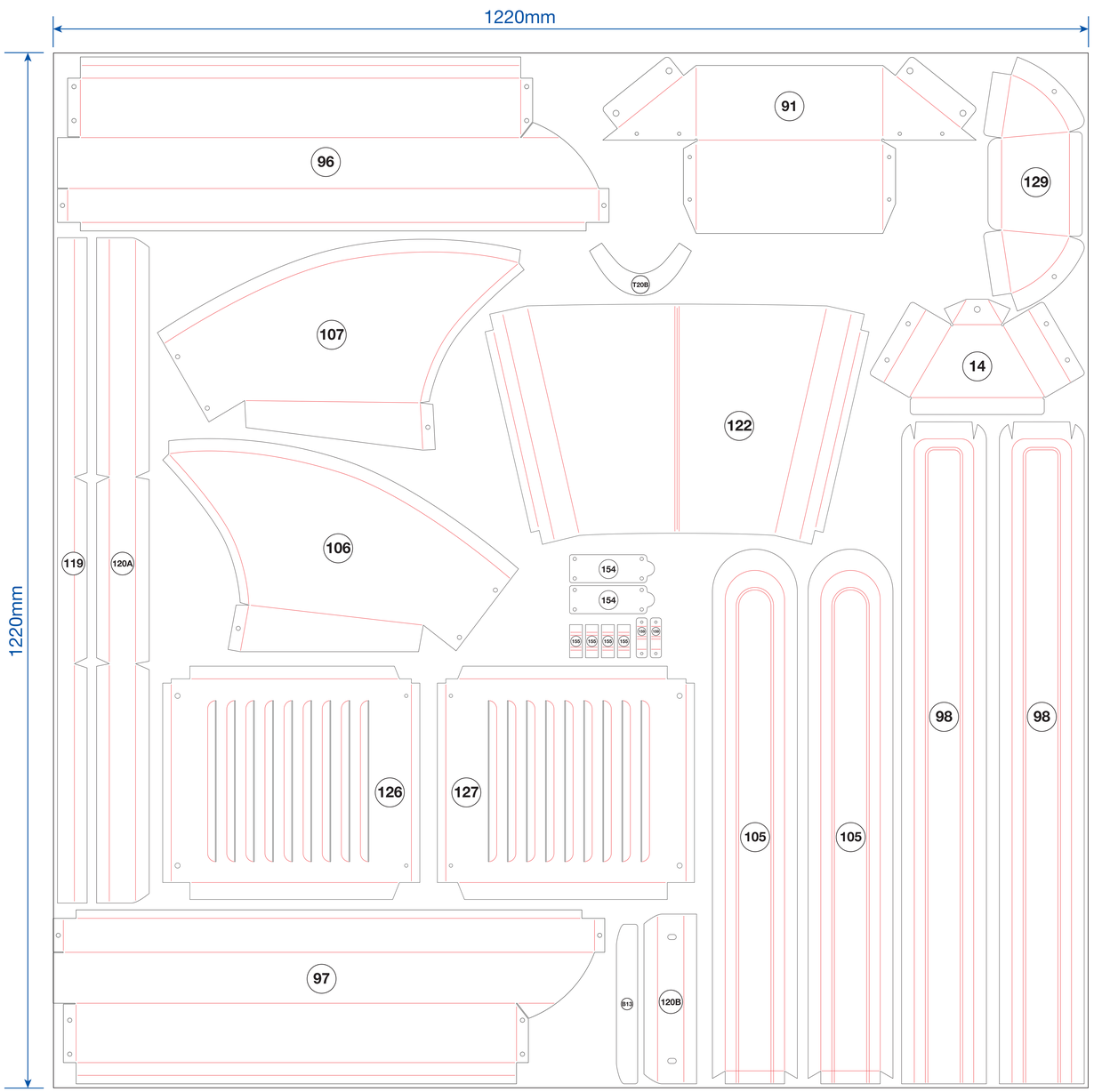

# CUTTING GUIDE - 17mm Thick Formply 1220 x 2440mm Sheet

**TEMPLATE**
**17mm Formply Sheet**

| | |
|---|---|
| TEMPLATE | DRAWING: 34 |
| SCALE: | TOLERANCE ± 2mm |

**MATERIALS LIST:**
1220 x 2440mm - 17mm thick Formply Timber Sheet

Flatbed Felix
PEDAL CAR BUILD

HARE & FORBES MACHINERYHOUSE
www.machineryhouse.com.au

Copyright © 2020 Hare and Forbes Machineryhouse
All rights reserved.

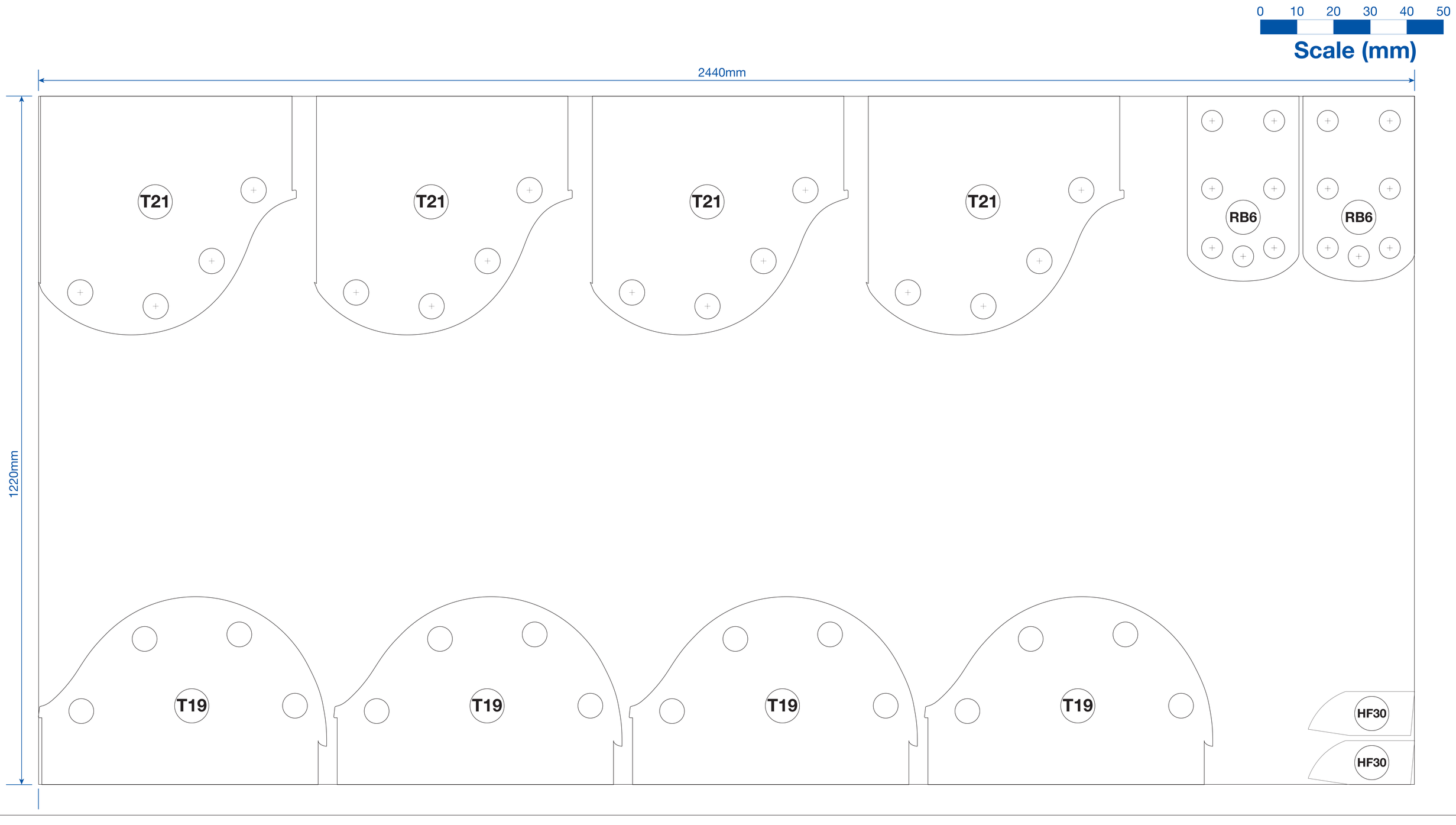

# CUTTING GUIDE - 19mm Thick Plywood 1220 x 2440mm Sheet

**TEMPLATE**
**19mm Plywood Sheet**

| | |
|---|---|
| TEMPLATE | DRAWING: 35 |
| SCALE: | TOLERANCE ± 2mm |

**MATERIALS LIST:**
1220 x 2440mm - 19mm thick Plywood Pine Sheet

Flatbed Felix
PEDAL CAR BUILD

HARE & FORBES MACHINERYHOUSE
www.machineryhouse.com.au
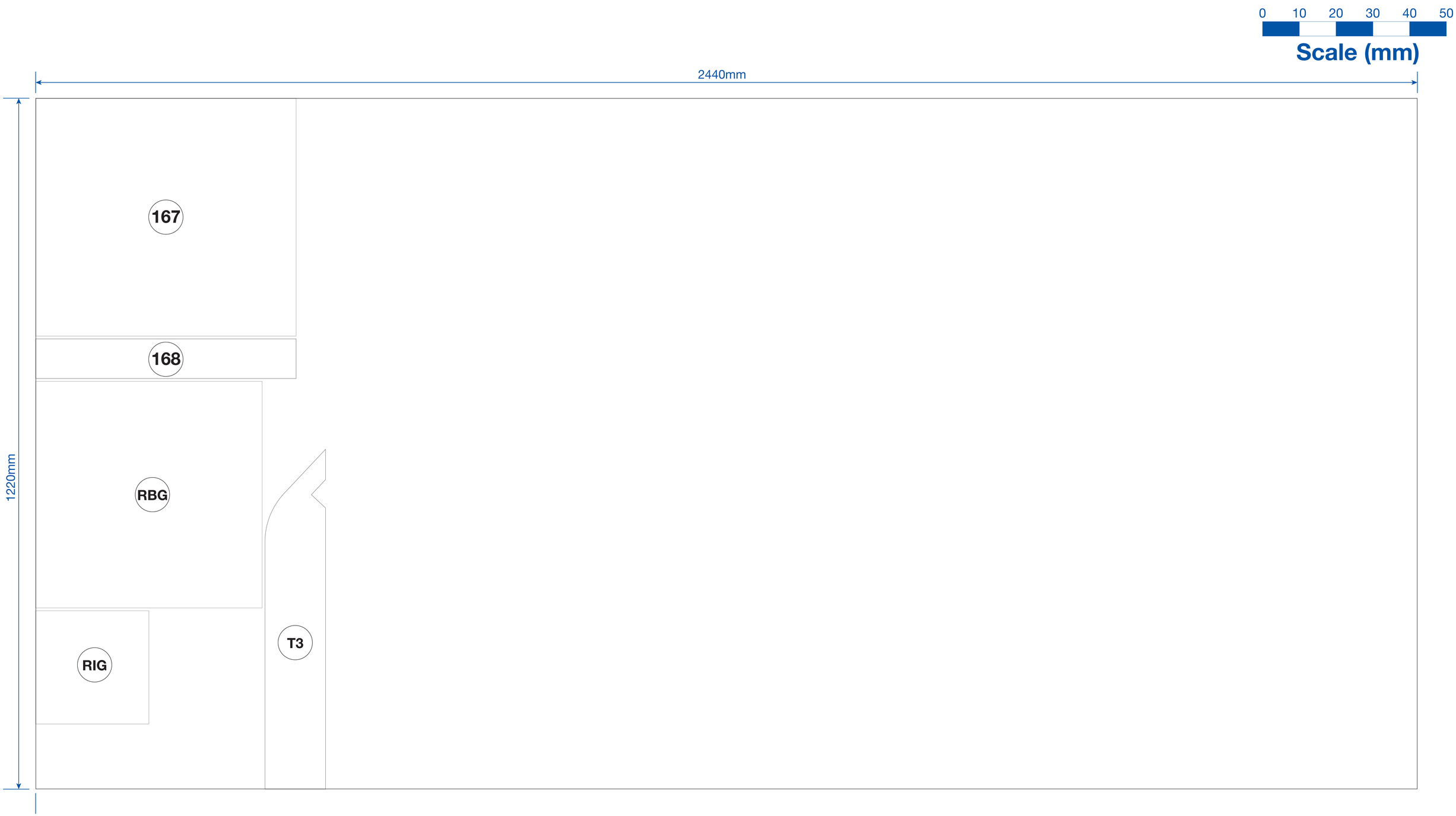
Copyright © 2020 Hare and Forbes Machineryhouse
All rights reserved.